FUTURE BUSINESS AND CONCLUSION OF CONFERENCE

MR. BELTER: I would like to get some kind of general reaction to the type of session that we have had today. Would anybody care to make any comments concerning this informal, round table type of discussion. I have had one comment that perhaps we should intersperse these types of panel discussions with the formal type of presentations that we had the first two days. In other words, maybe have something like five to six formal papers in the morning, and then maybe have the informal type of round table discussion this afternoon.

I am sure that all participants have been well aware of the wide variety and different aspects that we have attempted to cover in a period of three days. The first day was devoted pretty much towards fission product release studies, and followed up by some of these experiences in the second day on containment and confinement studies, especially at production sites like Hanford and Savannah River. The work that has been covered by Dr. Silverman, and the newer type of containment approaches, like diffusion board, and the foam encapsulation studies was also presented. Then we covered a wide range of subject material in today's four panel sessions; in one afternoon four papers were presented that had to do with the meteorlogic aspects of air cleaning. I am wondering, in view of this wide variety of subjects, do you think that we have really covered the field? What have we missed in this 3-day session that we should perhaps plan for maybe when we have the next meeting?

Are there comments or suggestions on other types of subject matter that we should attempt to cover, even in view of what we have tried to do here for three days? It has been mentioned that one person feels that we should bring out the need to consider fuel reprocessing problems. In this respect maybe we need more emphasis on the krypton-85 and tritium problems. This is one area that we did not cover at all. While we certainly didn't have any papers on rare-gas recovery methods, we had one paper on rare gas or noble gas detection methods. This is an area that we should attempt to cover in any future meetings. Is there anything else that we should consider as a possibility for future agendas?

DR. FIRST: This is an extension of the remarks I made a few moments ago. I wonder what the reaction would be to perhaps forming a committee to propose standards for in-place testing, or these other subjects which have come up and been of somewhat controversial view.

MR. BELTER: Certainly that is a good point. I agree with your previous statement that perhaps there are more people in this room right here that have the very basic background experience for developing standards in this area.

MR. BLOORE: A quick look has been taken to see if the ASA was interested in this type of standard. It is to be discussed at the next meeting.

MR. BELTER: This is a point that we probably can bring to somebody's attention at the next ASA meeting.

MR. SHAVER: It will be of interest to us in our new low-level radiochemistry building at Hanford to have specification considerations with regard to requirements that might be associated with Clean Rooms, and any other

experience that might be outstanding to date.

MR. LIEBERMAN: In the last several years there has been a new organization, the American Association for Contamination Control, which has been devoted essentially to Clean Room operations, and it has a good background of experience in Clean Room operation and design, which is available from the members of this group. I think that this might be a reasonable organization to give you assistance.

In addition to that the ASTM has a committee which also has connections with Clean Room problems.

MR. HUMPHREY GILBERT: The GSA will issue a Federal Standard on Clean Rooms. The work was done by Sandia and the Albuquerque Office; it has been reviewed and there have been hearings on it and there will be three orders of Clean Rooms.

MR. BELTER: At the beginning of the meeting I mentioned that perhaps everyone should give some thought to whether it would be desirable to have a laboratory training session like the one we held six years ago at Harvard. I recall it lasted for two days and was held prior to the regular meeting; it certainly involves a lot of work for Dr. Silverman and his group.

If there is enough of a need or demand for this type of training session we in Reactor Development would certainly seriously consider sponsoring or supporting this type of work in conjunction with our next meeting.

DR. SILVERMAN: These sessions consist of general orientation as to what you can expect from various types of air cleaners. There is a session on checking performance of a typical air cleaner, and a session on particle sizing, measurement, and there is one on behavior of sampling instruments. We cannot dignify them by saying they are laboratory sessions. They are more on the order of demonstrations for familiarizing people with the general concepts of air cleaning principles and practice. We would welcome enthusiastic interest on the part of no more than 40!

MR. BELTER: Perhaps maybe we could just have a show of hands right now of the people here who would think that either they themselves, or somebody in their immediate organizations, would find this to be quite useful. It looks to me approximately like somewhere between 15 and 20 hands. For the others, if you think this would be desirable, drop us a line after you discuss it a little more at your sites and let us know what you would feel would be useful in this area. Depending on the response we get, we could determine whether it would be a good thing to do for the next meeting.

Of course, that leads right into the next point, i.e., where the location of the next air cleaning conference should be. If we have the training session, or orientation meeting, this would almost of necessity cause it to be held at Harvard. If we do not have that type of session, however, we then could think in terms of some of the other sites. I have had several suggestions that it would be nice to have a meeting like this over at Harwell or Paris. About the only major sites that have not hosted the Air Cleaning meetings are Hanford and Savannah River, the two large production division installations.

MR. KEIGHER: I don't know who at Hanford ought to be offering an invitation, although there are many of us here. Our new Federal Building, the framework of which is partially up at the present time, will have a very handsome auditorium that will hold 300 people and will undoubtedly be finished by 1965. It will not be finished next year. I am not extending an invitation,

but we may have the best facilities that Hanford has ever had for technical meetings ready within 24 months.

MR. BELTER: Fine. Actually, we weren't looking for definite or specific places, unless somebody had a pretty strong feeling about it. I think we will let that point go and wait and see what response we have for a training session thing, and then decide where the next meeting would be held.

Perhaps Dr. Silverman would like to make a closing comment or two, and I have a couple of other things I would like to mention after that.

DR. SILVERMAN: On behalf of the non-Oak Ridge, non-AEC official delegates, I would like to take this opportunity to thank the Oak Ridge National Laboratory, and Union Carbide Nuclear Corporation, for being the host and for giving us what I think is an excellent session room.

All things considered this has been, in my opinion, an excellent meeting, and on behalf of all of you I am sure you would have the same feeling; we should thank the help we have had here, which has been outstanding.

MR. BELTER: Thank you, Dr. Silverman, and certainly on behalf of the AEC I want to express our appreciation, too, for the excellent facilities that we have had here. One other thing I would like to do at this time, too, is to express our appreciation to the Division of Reactor Development, appreciation to Dr. Silverman and his group for the invaluable assistance that they have given us in developing this meeting, and as usual, in helping to run the meeting.

We are certainly pleased to have the number of foreign participants that we have had here, and they have made a very valuable contribution to the overall program. We are always pleased to have representatives here from our friends in the UK, from France and Canada, and whatever other countries can make it to these types of meetings. We are very pleased to have you with us, and we hope that your subsequent stay here in the States, and your visits to some of our sites, will be useful and rewarding.

For those who do have to leave at this time, we are sorry that you do have to go. However, I still think we have time, here, for some of the questions that were not raised at the time of the first and second panel meetings this morning, and if those panel members are still here, and you would like to continue, we certainly would be prepared to go on. So we will bid a pleasant adieu to those who must leave right now, and certainly would like to keep the rest of the meeting going as long as the group desires.

There were a number of questions not answered during the sessions.

I was wondering if the NRL Panelist could perhaps go into a more detail in describing or elaborating on shock-testing method used for filters, and also what type of environment is this shock-testing method being used for in the Navy? Of course, what I am thinking of principally is thinking in terms of the application to our own nuclear-powered ships.

NRL PANELIST: These are standard Navy specifications for shock and vibration. They have been established over the years, mainly to insure that any piece of equipment that goes aboard a ship will be predictively capable of withstanding the environment one expects.

Of course, ships vibrate particularly when you back down after going at flank speed! This is a standard check which every ship must be able to perform on their trials.

The vibration tests subject the equipment to increasing frequency and amplitude on a vibrating table. The equipment must be capable of performing to the specifications after such environmental tests equally as well as before.

The shock test depends upon the size and mass, and actually there are three different size shock machines. The filters were actually subjected on the medium sized shock machine, the hammer is about the size of my body, and weighs several hundred pounds. The filter is mounted in such a fashion that the three dimensions will achieve a certain predicted level of shock. It is a very dramatic test to witness, to see how the filter attempts to jump out of its housing, when the shock is applied. The filters we have tested were able to withstand, I believe, to the third or fourth level of shock intensity. The hammer is lifted up to different heights before it strikes the table on which the filter is mounted; each filter failed at about the third or fourth level. We did not use a new filter each time, because the equipment is actually supposed to withstand each of nine blows. Each of eight filters passed the vibration test. None of them passed the shock test which follows a standard specification derived through the years. Of course we don't expect each piece of equipment to have to be constantly in that environment, but it has to be capable of withstanding that environment.

COMMENT: I was going to comment on the validity of specifications to the environment. Merchant ships do not have guns on them. We went over the standards with the David Taylor Model Basin personnel, and their calculations of what the vibrations would be on the SAVANNAH, which we had checked out with vibrometer studies during the few times it had been to sea, and we decided as for the standards we were not going to have any part of it. It was just useless.

NRL PANELIST: There were three types of damage that were noticeable. In one type under shock the separators came through the paper, actually punctured through the paper. In another type of damage it was a cross-cutting. The corrugated edges would actually shear the paper like scissors. A third type was simply a complete rupture of the seal. An unusual type was the filter with the pressure glass mat surrounding the core, between the frame and the paper core. In this type the separation occurred so that the glass paper actually came out of the filter; it was actually a matter of differential forces involved.

QUESTION: Relative to the problem of charcoal I would like to know what effect DOP smoke would have on charcoal as far as depleting its efficiency?

HASL PANELIST: DOP goes through a charcoal bed without very much trouble, 95% or more. As far as DOP vapor is concerned, this vapor pressure is pretty low. I wouldn't anticipate too much trouble. You should cut the DOP test as short as you can conveniently, because you are going to do some damage to the carbon bed, but I think it is going to be pretty small.

QUESTION: I wonder if someone here could comment on the Dynel supply air filter performance and economy, compared to other filters of this type?

COMMENT: At the Naval Research Laboratory, as part of our submarine habitability program, we looked at Dynel as a prefilter. We ran it at standard flow conditions and found an appreciable penetration. It is about equivalent to the Navy Standard metal mesh filter. I think the Farr units are comparable to the Standard Navy ones. It has a further disadvantage that ruled it out as far as our application in the ship as it decomposes rather readily under high temperature conditions. It has a defibering quality that will allow the fibers, which are not tightly bound in the mat, to go on into our electronic instruments and they collected in some of the areas that were very vital for us.

We are now looking at some of these micropore polyurethane materials that seem to have some of the advantages; they decompose into only oxides of nitrogen under fire conditions, and they do not have any fibrous blow-off. They have approximately the same filtration performance as Dynel but they have slightly higher pressure drops.

COMMENT: This is not a technical question, but is a point of view that I believe requires open discussion.

What are we achieving by our expenditures for experimentation, theoretical studies, and development work unless this can be translated into acceptable engineering safeguards as far as site criteria for power reactors go? If we cannot achieve an economic benefit by obtaining sites closer to centers of resident or trade population, why are we spending on containment and filter work? This is a philosophical, a non-technical question.

QUESTION: I would like to ask you if you think you could get the SAVANNAH into a port if you did not have some filter systems on it that were backed up by large masses of data taken from the laboratory?

COMMENT: We have large masses of data; lots of it. Don't forget those filters have been sitting in that ship running continuously since last January.

But the problem is, when you get into a political or social situation how close can you bring a reactor into a large city? The immediate question is: "Well, maybe your filters aren't as good as they are supposed to be. Let's cut the filter efficiency down." In that way you will keep the circle the same as it was before you made any other equivalent improvements in the ship.

So what we have got is the fixed distance established by 10 CFR 100, and engineering safeguards are not being given full credit.

Therefore, why spend money without an economic return?

I agree with what you asked. We have reams of technical data.

MR. BELTER: I think, though, we actually do not have data of what would happen under accident conditions. We have never had an MCA, so we have never had to test out the efficiencies of these various cleanup systems. These certainly will be tested in these various types of engineering demonstrations, and tests that are being planned starting off with the Nuclear Safety Pilot Plant work at Oak Ridge, and later scale-up. We hope, in what is called the Containment Test Facility and also perhaps in the large-scale installation which is now in the planning stages out in Idaho that these types of cleanup systems, everything from sprays to the different types of high efficiency filters, and charcoal beds, and whatever other type of cleanup systems which might also be developed in the next two or three years, will be tested in these facilities.

Of course, the basic question arises then when we do get that data, how much of it will be accepted as engineering safeguards, or in lieu of distance, as far as reactor siting is concerned? Right now I do not think this is a question that perhaps can be answered, but we certainly pose a very perplexing type of question. It is not entirely a technical question involved; there are many other political-social aspects that are involved. If you are sitting in a position of having to review these reports from a licensing standpoint there certainly are a lot of other pressures that are brought to bear.

PANEL A CHAIRMAN: As we stand today, the greatest engineering advance that could be made in contamination control would be to investigate and approve the efficiency of high-efficiency systems. I think this is the greatest need now; from there we can go on to new developments in filters and filtration. But in the case of systems today, they need work. I am not worried about the Laboratory today: the systems have been tested, and we know what the efficiency of each system is; we know what it handles. But, we haven't provided this service around the country to other installations. Many think that when a high-efficiency filter is installed in a system, there is a high efficiency system. We have found, on the first test, efficiency order of magnitude 2% on up. Thank you.

MR. BELTER: Are there any other questions or statements that anyone would like to make at this time? We have arrived at pretty much the elastic limit of our open or formal type of questions.

COMMENT: We have been sitting here for three days and we have heard some interesting things about filters. We have heard, for example, how many hundred pounds of steam have been passed through a filter at seven times the rate of flow. They have been heated to 700°F. We attack them with DOP, and others attack them by hitting them with hammers that weigh about 300 pounds. All of this testing is to evaluate filters; actually we have to admit that we have got a pretty good product that we are hitting, pounding, steaming, and burning!

MR. BELTER: That's a very good comment. Does anyone else have anything they want to say at this time? If not, I think we will formally adjourn this part of the 3-day meeting, and as was announced be prepared to start on the Tours at ten minutes before 8:00 tomorrow morning.

TOURS - Friday Morning, 25 October 1963

8:00-10:30	Tour A. Oak Ridge Test Facility, ORGDP (US Citizens Only)
8:00-10:30	Tour B. In-Place Filter Testing Facilities, ORNL (For Persons Not Attending Tour A)
10:30 -12:00	Tour C. Central Off-Gas Treatment Facility and Nuclear Safety Pilot Plant (All Attendees)

Friday Afternoon, 25 October 1963

1:00-3:30	Tour D. General Plant Visit Around ORNL
1:00-2:15	Tour E. In-Place Filter Testing Facilities, ORNL (For Persons Who Did Not Attend Tour B)

SUPPLEMENTARY PAPERS

IN-PLACE TESTING OF HIGH-EFFICIENCY FILTERS AT ORNL

E. C. Parrish and R. W. Schneider

Oak Ridge National Laboratory

ABSTRACT

In most exhaust systems the high-efficiency filter is the primary means of minimizing atmospheric contamination during normal operation or during the accidental release of radioactive particulate material. Any effective contamination-control program must include a routine test for measuring the filtration efficiency of each system with its operational filters in place. The program of testing filter systems in situ at this Laboratory has clearly demonstrated the importance of this contamination-control technique.

INTRODUCTION

During the last three years the Oak Ridge National Laboratory (ORNL) has been actively engaged in the inspection and testing of high-efficiency filters. Since March 1961, over 1500 new filters have been checked for stores stock. Since November 1962, more than 1000 in-place tests have been made to determine the filtration efficiency of actual operating filter systems.

It is obvious that one cannot have an efficient system unless sound filters are used. It is also obvious that the use of sound filters alone does not ensure an adequate system efficiency. It is for this reason that ORNL has emphasized the importance of testing installations in situ at a prescribed frequency, after every filter change, and when there are reasons to suspect that filtration efficiency has deteriorated.

Stack monitoring is also an important contamination-control technique. In some instances, however, systems may contain very little activity

except in the case of an accidental release. In these cases stack monitors will only announce the release of activity to the atmosphere if the filtration efficiency of the system is unsatisfactory.

The method ORNL uses for testing filter systems is basically the same as that employed by the AEC Quality Assurance Stations for testing individual filters, except for the method of generating the aerosol. The thermal generators used by the AEC stations produce an aerosol of dioctyl-phthalate (DOP) with an average particle size of 0.3 μ. Since thermal generators are not suitable for field work, ORNL employs air-operated generators, which also produce an aerosol of dioctyl-phthalate, but with a slightly larger average particle. The difference in particle size is not considered important. Tests on single filters which were previously checked by AEC Quality Assurance Stations show excellent agreement.

IN-PLACE TESTING PROCEDURE

The testing of filter systems in situ is not difficult. The procedure used by ORNL consists in discharging a polydisperse aerosol of dioctyl-phthalate, produced by atomization of the liquid with compressed air, into any convenient air intake ahead of the filter bank. The concentration of the unfiltered smoke is measured by drawing a sample from the duct ahead of the filter bank and passing it through a forward-light-scattering photometer. The concentration of the filtered aerosol is then measured from a sample withdrawn downstream of the filters. The filtration efficiency of the system is calculated from the two concentration values.

In general, the in-place test is conducted according to the procedure described above. In a few instances it has been necessary to modify the basic technique to circumvent physical limitations imposed by the particular installation. For additional information, see Report ORNL-3442, Tests of High-Efficiency Filters and Filter Installations at ORNL.

Figure 1 illustrates one type of photometer used by this Laboratory. The air-operated generator (Fig. 2) was developed by the Naval Research Laboratory particularly for field applications. Figures 3 and 4 show the removal of an upstream and downstream sample, respectively, during an in-place test.

When an in situ test shows that the efficiency of the system is unsatisfactory, the source of the leakage can be found by probing the downstream side of the filter bank. One method of performing this operation is shown in Fig. 5, except that the door to the filter house was left open for photographic purposes. Leaks are indicated by the erratic behavior of the needle on the amplifier when the probe picks up unfiltered aerosol particles.

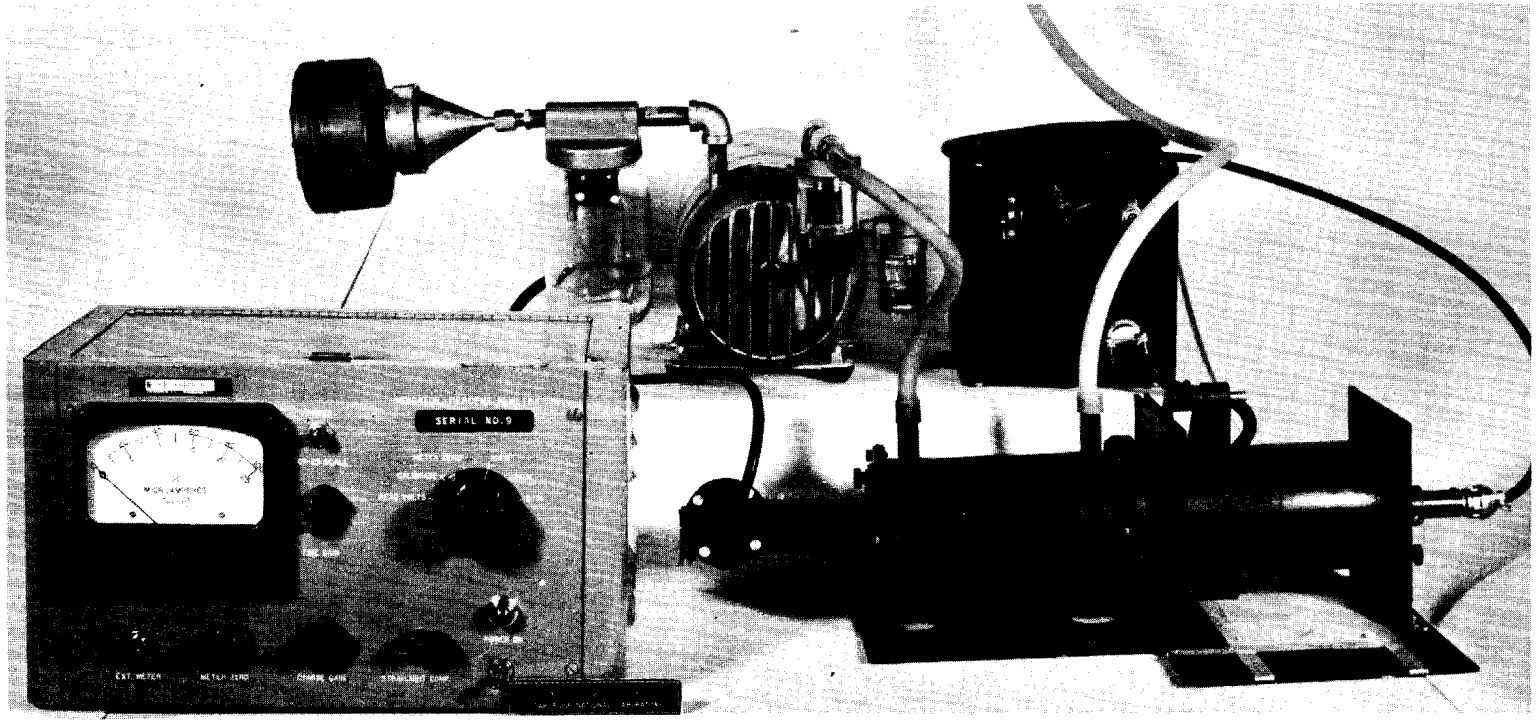

Fig. 1. A Forward-Light-Scattering Photometer.

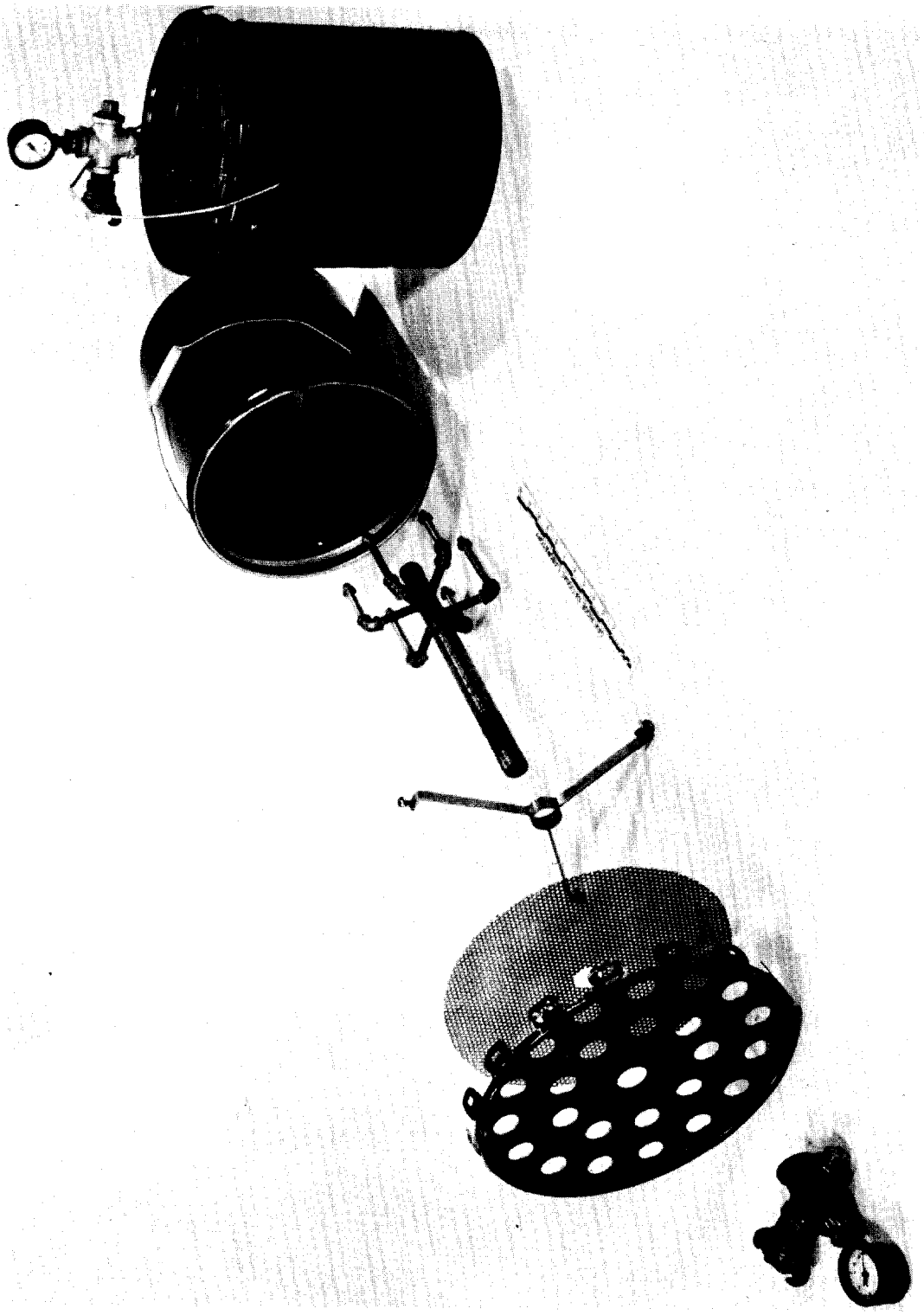

Fig. 2. High-Capacity Aerosol Generator.

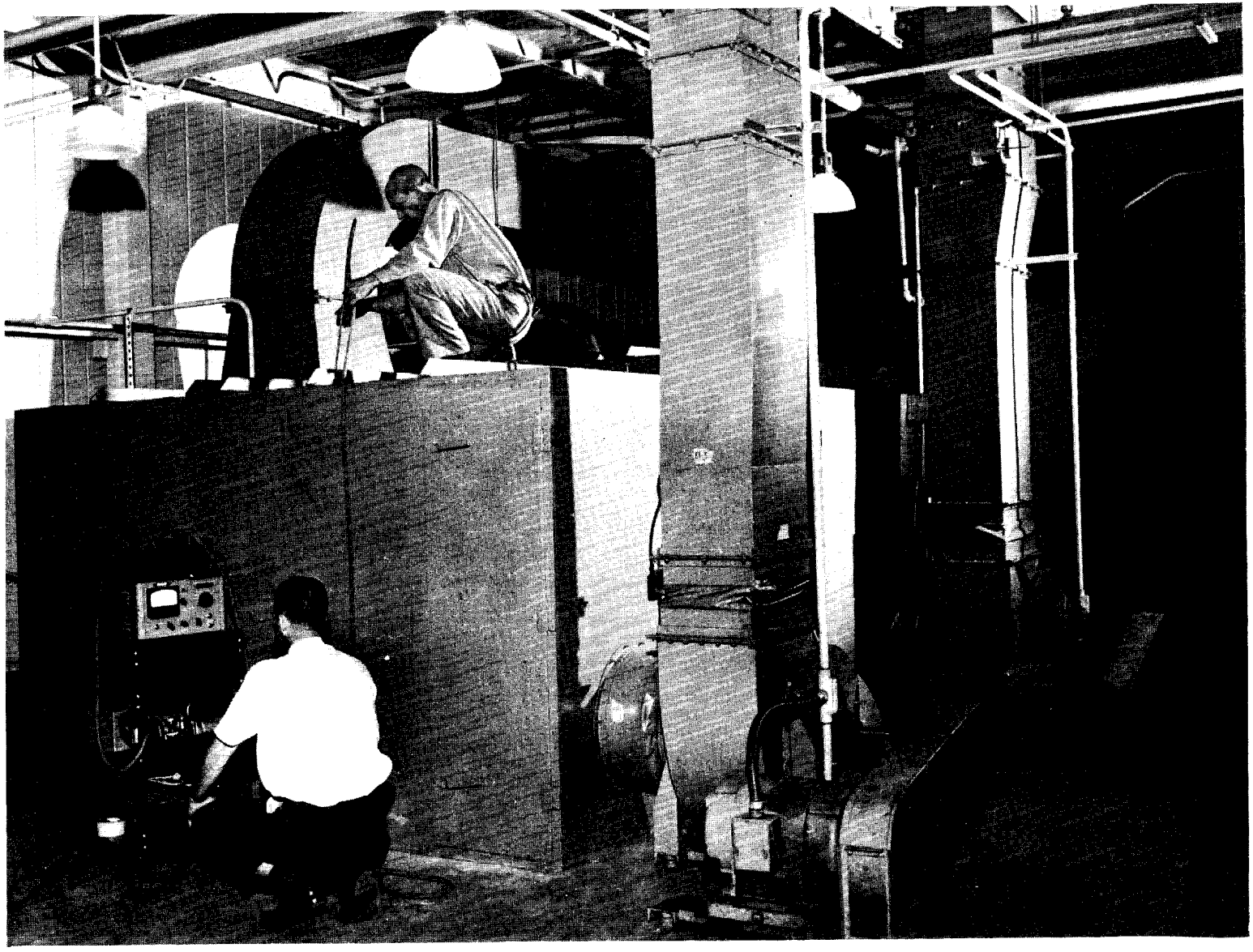

Fig. 3. Removal of an Unfiltered Sample for a Concentration Determination.

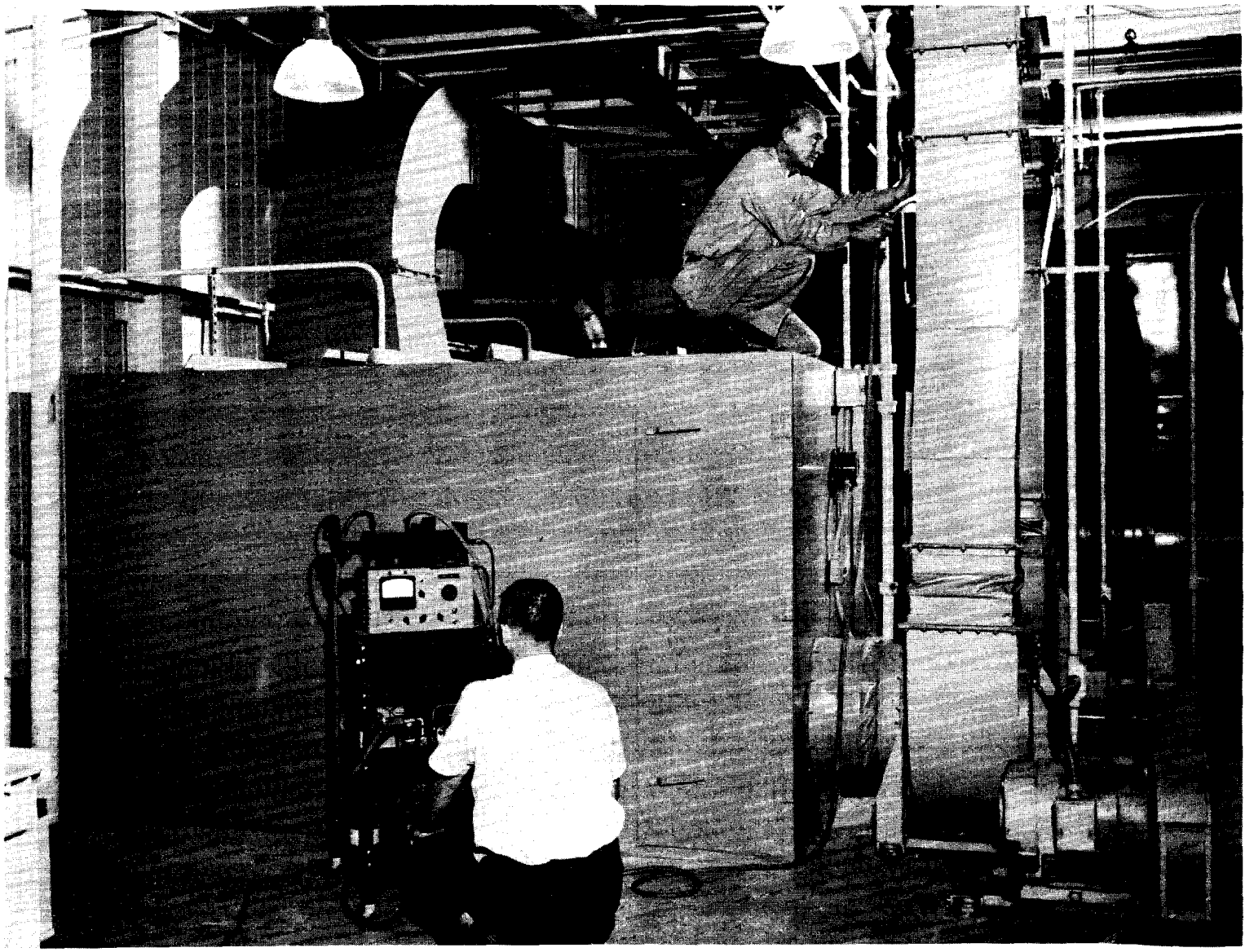

Fig. 4. Removal of a Filtered Sample for a Concentration Determination.

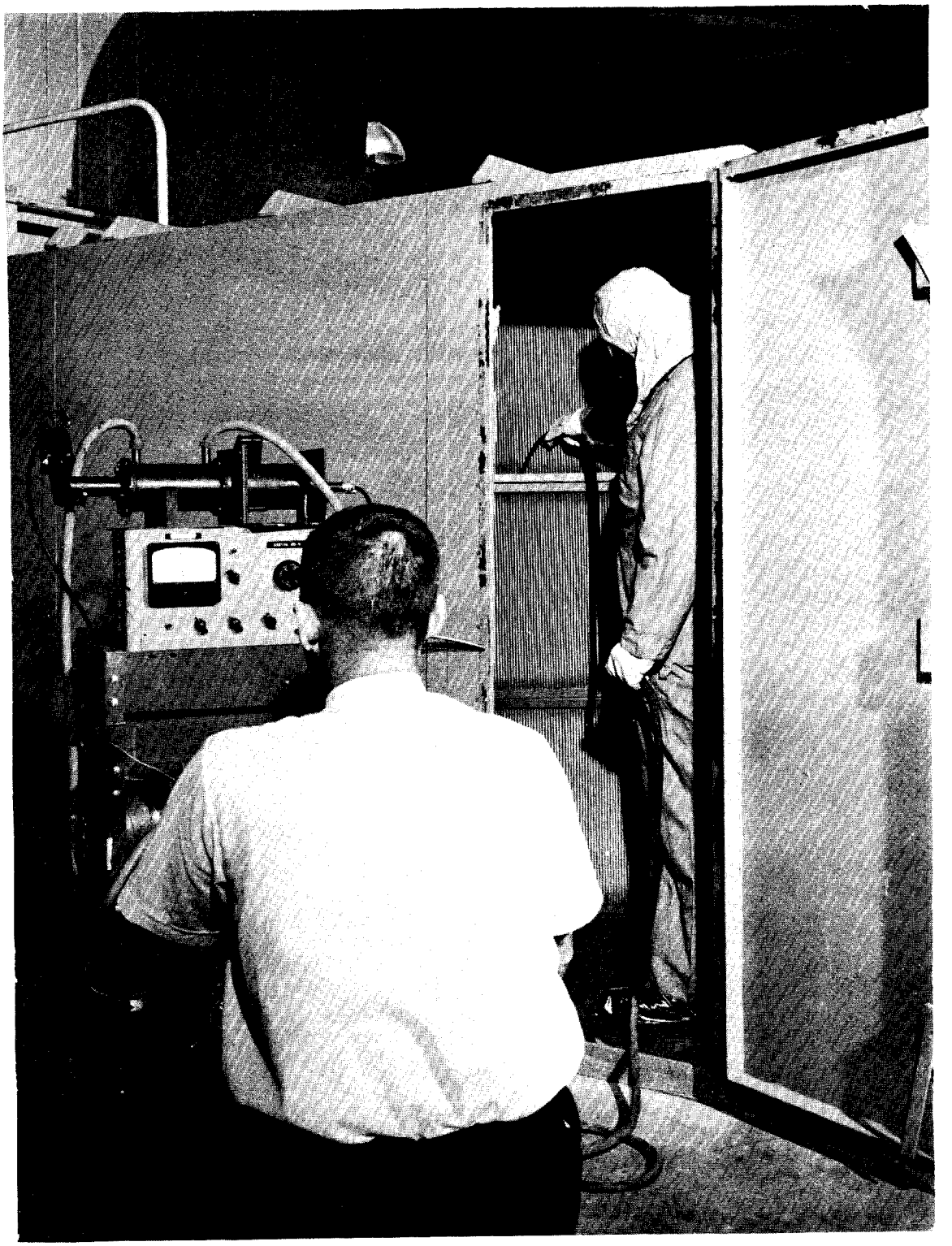

Fig. 5. Probing the Downstream Side of a Filter Bank.

RESULTS OF IN SITU TESTS

There are many ways available to present the results of the tests to illustrate differences which may exist between different types of systems. It appeared that, on the average, small systems containing one or two high-efficiency filters should give a higher "first test" efficiency than systems with a greater number of filters. Also, it seemed reasonable to expect that filters serving chemical laboratory exhaust hoods might have lower "first test" efficiencies because of the presence of corrosive vapors than systems handling air essentially free of chemical vapors. The term "first test" is intended to mean the first in situ test of a particular system and bears no relation to the age of the installation or the length of time the filters were in service prior to the test.

Table I presents the results of the first in situ test of 486 different systems. Two categories were selected for the reasons indicated above: (1) Chemical Laboratory Hood Exhaust Systems and (2) Cell Ventilation and Normal Building Exhaust Systems. Category 2 has been subdivided to show filter banks of one or two filters and banks containing three filters or more. Only installations containing one or two filters are tabulated in Category 1 since very few systems serving laboratory hoods contain more than two filters.

On the basis of the data in Table 1 and experience in general, the following conclusions may be drawn:

1. It is relatively easy to achieve a system efficiency of 99.97% or higher in small single- and double-filter installations. No significant difference is apparent between Categories 1 and 2.

2. Relatively few existing large multifilter installations had a satisfactory efficiency at the time of the first test. Only 31% of the systems containing three filters or more had an efficiency of 99.97% or better on the first test as compared with about 78% for the one- and two-filter installations.

3. One system was found to have an efficiency of only 2% owing to deterioration of the filter media. In a few other instances low efficiencies were found to be the result of corrosive attack of the media. In general, however, efficiencies less than 99.97% were attributed to (1) faulty installation of the filters, (2) damage to the filter media during installation, (3) gasket leakage due to inadequate compression, and (4) inadequacies in the filter housing and filter mounting frames.

4. New systems of all sizes have a reasonably good chance of passing a preoperational in situ test if close attention is given to details of design and construction and if the filters are properly installed.

Table 1. Results of the First In Situ Test of Two Different Types of Systems Employing High-Efficiency Filters

Range of Efficiency (%)	Category 1 Chemical Laboratory Hood Exhaust Systems (1 or 2 Filters per Bank)		Category 2 Cell Ventilation and Normal Building Exhaust Systems (1 or 2 Filters per Bank)		(3 or more Filters per Bank)	
	Number	Percent of total	Number	Percent of total	Number	Percent of total
100.00-99.97	263	76.0	72	79.0	15	30.6
99.97-99.95	5	1.4	3	3.3	3	6.1
99.95-99.90	15	4.3	2	2.2	4	8.1
99.90-99.0	25	7.2	5	5.5	20	41.0
99.0 -95.0	22	6.4	7	7.7	4	8.1
95.0 -90.0	7	2.0	0	0	1	2.0
90.0 -80	4	1.2	0	0	0	0
80 -0	5	1.4	2	2.2	2	4.1
Total	346		91		49	

Two new systems (30,000 and 80,000 cfm) showed efficiencies of better than 99.97% on the first test. Each system subsequently checked out better than 99.97% on two consecutive filter changes without the need of remedial measures.

CONCLUSIONS

Most existing systems can be tested in situ. The task is usually easier and more economical, however, when new installations are designed or existing systems are modified to facilitate such a contamination-control procedure.

In-place testing is a powerful tool for verifying the adequacy of a system or for locating the source of leakage, yet the cost represents a very small fraction of the cost of the filters.

THE EFFECT OF HOLES ON THE PERFORMANCE CHARACTERISTICS OF HIGH-EFFICIENCY FILTERS

by

F. E. Adley and D. E. Anderson
General Electric Company
Richland, Washington

The development of high-efficiency fibrous filters has been a major advance in the science of industrial air cleaning. Stringent requirements set forth by the U. S. Atomic Energy Commission concerning the removal of radioactive particulates from plant waste gases was a prime mover in the commercial production of these filters. The Commission's contractors, as well as other industries, now routinely use high-efficiency fibrous filters where dependable, high quality air cleaning is required.

This paper describes how damage to high-efficiency filters alters their efficiency in a characteristic manner. Incorrect seating of gaskets in the filter mounting frame, gasket damage, or mechanical damage to the filter medium itself--any of these types of damage can easily occur during handling and installation.(1) In many instances, such defects are not apparent from visual inspection.

Performance Characteristics

Commercial, high-efficiency filters conform to rather uniform overall design and construction. They normally consist of a square wood or metal frame containing a core of filter paper folded into pleats. Figure I shows a typical high-efficiency filter unit.

---

(1) TID - 7023 High Efficiency Particulate Air Filter Units by Humphrey Gilbert & James H. Palmer, U. S. Atomic Energy Commission, August, 1961.

This work was performed under contract No. AT(45-1)-1350 between the U. S. Atomic Energy Commission and the General Electric Company.

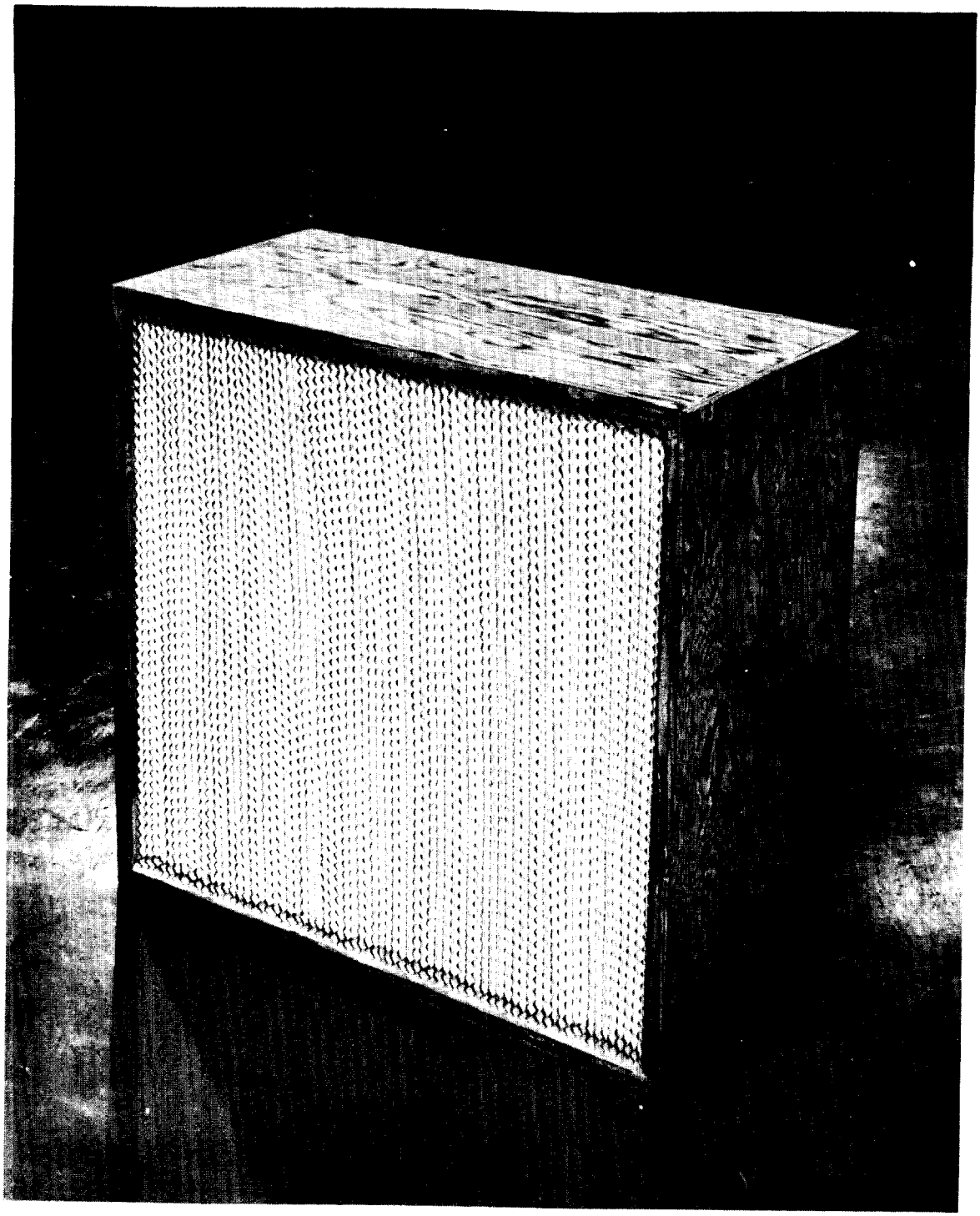

Figure I

Standard filters of this type are available with flow capacities ranging from 25 cfm to over 1000 cfm. The components of a typical filter as shown in Figure I include: the frame, the filter paper medium, the separators between filter pleats, the gasket around the frame, and an adhesive which bonds or seals the filter core to the frame. Such a filter unit will normally have a penetration of less than 0.05% at its rated airflow.

The standard efficiency test used by filter manufacturers and by the Atomic Energy Commission's two testing stations(2) is a DOP test. The DOP test uses a dioctyl phthalate smoke of 0.3 micron diameter as the test aerosol according to Military Standard MIL-STD-282, May 28, 1956. Penetrations in excess of 0.05% are considered to be indicative of a defective filter. High penetration levels are usually the result of defects, some of which are evident by visual inspection and others which are not. High penetration can be attributed to a number of causes. Breaks may be present externally or internally due to factors such as punctures or rough handling. Also, if the core is inadequately sealed to the frame, leakage may occur and, in addition, the frame joints or the gaskets may permit the passage of unfiltered air.

The filter media commonly consist of a bed or paper of fine fibers of glass, or ceramic, or combinations of either one with asbestos or cellulose. Particle removal is accomplished primarily by direct interception, inertial impaction and diffusion. Diffusion is a prominent force in the removal of submicron particles with such paper. The equation for diffusion as indicated below, shows that the efficiency of removal is inversely proportional to the velocity of filtration.

$$D = \frac{1}{v\, d_f} \; \frac{(C\, k\, T)}{3\, n\, d_p}$$

where
- D = diffusion parameter
- C = Cunningham correction factor
- d_f = fiber diameter
- d_p = aerosol particle diameter
- k = Boltzmann constant
- n = viscosity of gas (poise)
- T = gas temperature (degrees absolute)
- v = filtration velocity

---

(2) Occupational Hygiene Operation, Hanford and Oak Ridge Filter Test Facility, Oak Ridge.

Effect of Hole in Filter

The effect of velocity on penetration in high-efficiency filter paper containing holes has been previously established.[3],[4] It was shown that with DOP smoke of about 0.3 micron diameter a reduction in velocity was accompanied by an increase in penetration. A simple laboratory arrangement was set up to demonstrate the relationship with air cleaning filter paper to provide a basis for extending the understanding of this action to high-efficiency space filters similar to that in Figure I.

Specimens of filter paper, 2-3/8 in. diameter, of the type used in commercial filters were mounted, as shown in Figure II, so that holes could be added without dismantling the holder.

In initial tests, flow through the specimen was reduced from approximately 7.8 fpm to 0.62 fpm. The tests were performed on an "as manufactured" paper specimen. A 0.012 in.-diameter hole was added and a remeasurement of flow rates at various pressure drops was made. The results are shown in Figure III.

The flow through the hole, as presented by Curve C, was estimated by difference between Curves B and A. Calculated flow through the hole, assumed similar to a thin-plate orifice,[5] was obtained by the formula below and is shown in Curve D.

$$Q = 21.8\ Kd^2\ \sqrt{h}\ , \qquad (1)$$

where
Q = volume rate of airflow in cubic feet per minute
K = coefficient of airflow
d = orifice diameter in inches
h = pressure drop across orifice in inches of water.

---

(3) NRL Report P-2642, Development of Smoke Penetration Meters by H. W. Knudson and Locke White, U. S. Naval Research Laboratory, Wash. D. C., Sept. 14, 1945.

(4) Performance Characteristics by Dry Fibrous Air Filter Media, Earl Stafford and Walter J. Smith, Arthur D. Little, Inc., Cambridge, Mass., Dec. 28, 1950.

(5) Industrial Health Engineering by Allen D. Brandt, 1947, John Wiley & Sons, Inc., New York.

FILTER PAPER TEST ARRANGEMENT

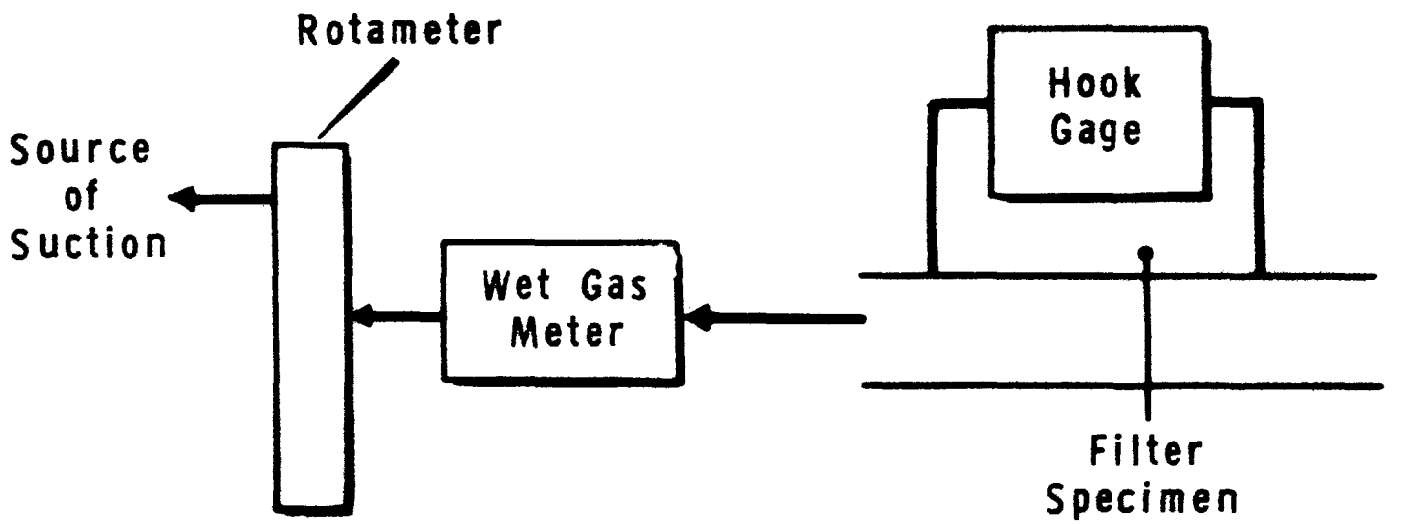

Figure II

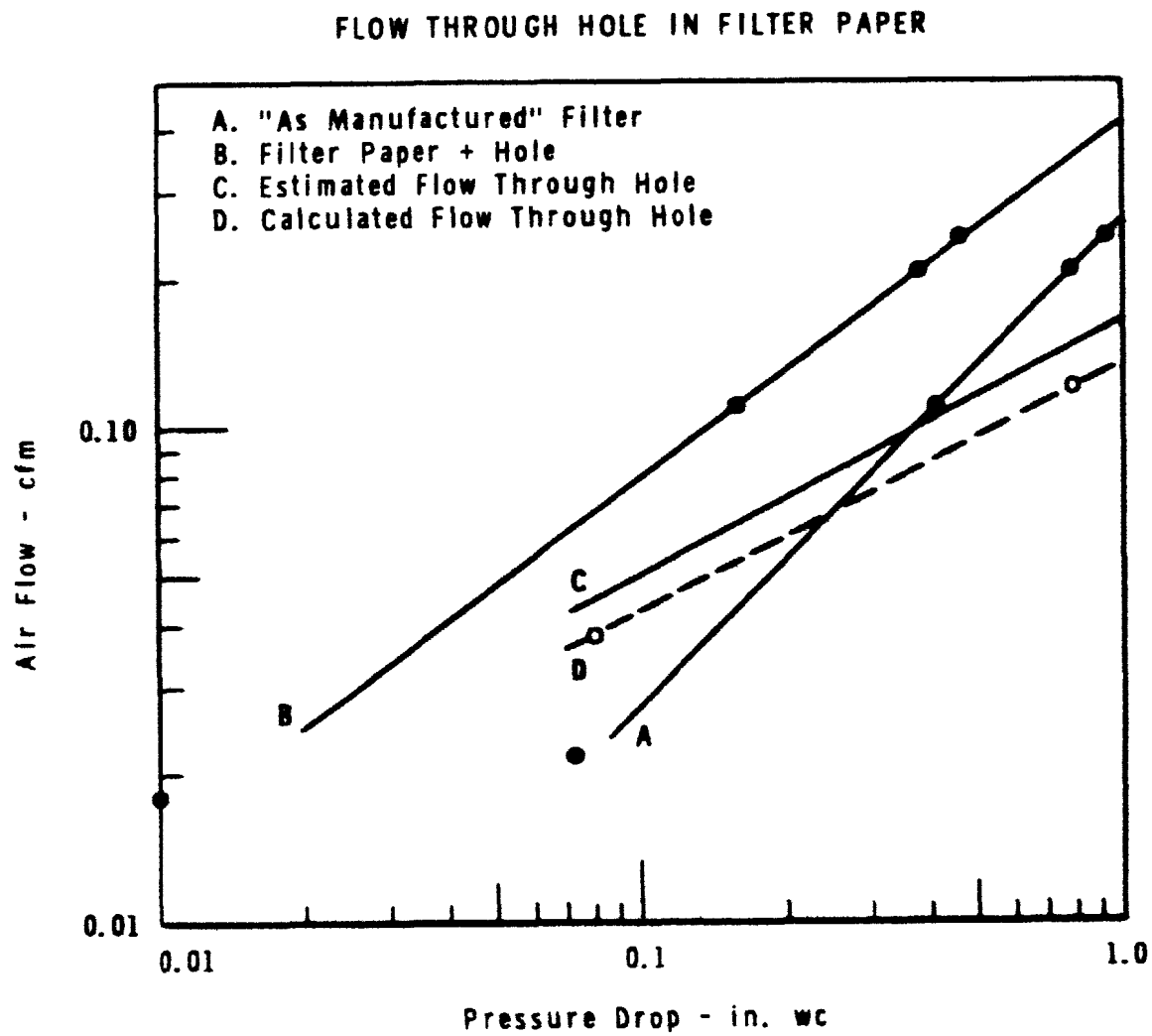
FLOW THROUGH HOLE IN FILTER PAPER
A. "As Manufactured" Filter
B. Filter Paper + Hole
C. Estimated Flow Through Hole
D. Calculated Flow Through Hole
Air Flow - cfm
0.10
0.01
0.01
0.1
1.0
Pressure Drop - in. wc
A
B
C
D

Figure III

The change in airflow-pressure drop relationship caused by a hole in the filter medium arises because airflow through a fibrous filter bed at the velocities studied are essentially streamline, whereas the flow through a hole is turbulent. It has been shown by Silverman[6] that the flow characteristic through a fiber filter may be expressed as:

$$R_1 = K_o V \quad , \tag{2}$$

where R_1 = resistance in inches of water
V = filtering velocity in feet per minute (face area)
K_o = resistance coefficient (clean cloth).

In turbulent flow as indicated in Equation (1) the capacity varies as $h^{\frac{1}{2}}$. A unit reduction in pressure drop will, therefore, result in a less rapid drop in flow through a defective filter medium than through an intact medium due to the influence of the hole, the flow through which falls off less rapidly than that of the medium. This is evident in Figure III where the flow through the filter decreased 85% when the pressure differential was reduced from 0.90 in. to 0.10 in.; whereas, the flow through the hole diminished by only 67%.

From the preceding review, it can be concluded that a characteristic difference is demonstrable in the pressure drop-airflow relationship between good filter paper and that having defects.

SPACE FILTER PERFORMANCE

Experimental Defects

In view of the difference in the pressure drop-airflow relationship in good and defective filter papers, tests were made to determine the changes in the airflow-penetration relationship which occur in a commercial space filter. A typical 1000 cfm filter of the type shown in Figure I was tested before and after the consecutive addition of two 1/8 in.-diameter holes in the medium. A series of penetration measurements were made during the reduction in flow from

(6) Filtration Through Porous Materials, Leslie Silverman, Amer. Ind. Hyg. Quarterly, 11:1, March, 1950.

1100 cfm to 450 cfm. The results are presented in Figure IV.

The filter unit (Figure IV) had a known penetration value of 0.01% as determined by standard DOP test. The penetration varied directly as the airflow (Curve A).

After addition of a 1/8 in. hole to the crown of one of the filter pleats, measurements were repeated. Penetration varied inversely with airflow (Curve B). Data in Curve B were obtained with the hole in the upstream position. When the hole was positioned downstream, an increased penetration resulted (Curve C). The addition of a second 1/8 in. hole on the same face as the first hole allowed the penetration shown in Curves D and E with the holes oriented in the upstream and downstream positions, respectively.

Due to the compact pleating of the filter, the discharge gas stream from the holes when on the upstream side was restricted and disturbed by the proximity of the separators and sides of the filter pleats. When the holes were on the downstream side the unrestricted discharge gas stream resulted in a greater airflow and penetration.

"As Found" Defects

The demonstration of a characteristic airflow-penetration relationship in a space filter by a controlled defect in the form of a hole in the filter medium prompted the testing of 19 high-efficiency space filters. Twelve contained no visible defects, and 7 had defects of various types. Tests were performed by a series of penetration measurements as the airflow was reduced from the rated capacity. The results are presented in Figure V.

The filters having a penetration of about 0.01% and lower at rated airflow showed a reduction in penetration as the airflow was reduced. Those filters with penetration values of greater than 0.01% at rated flow as demonstrated by Curves D through S, showed an increase in penetration as the flowrate was reduced. This appears to indicate that there was some factor involved which permitted a portion of the air to pass through the units unfiltered. In some instances, as will be discussed later, defects were evident in some filters

CHANGES IN PENETRATION CAUSED BY THE ADDITION OF HOLES

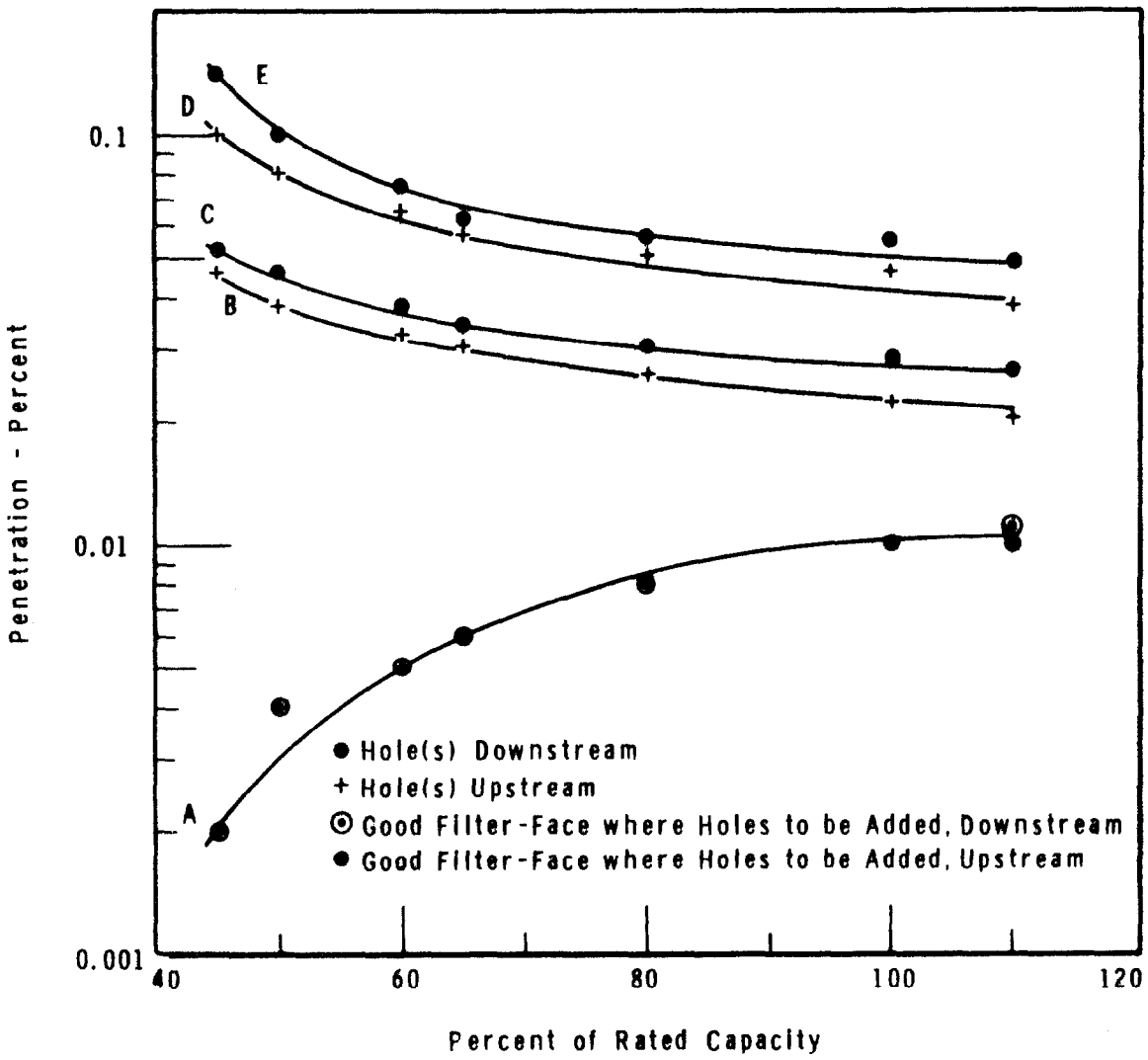

Figure IV

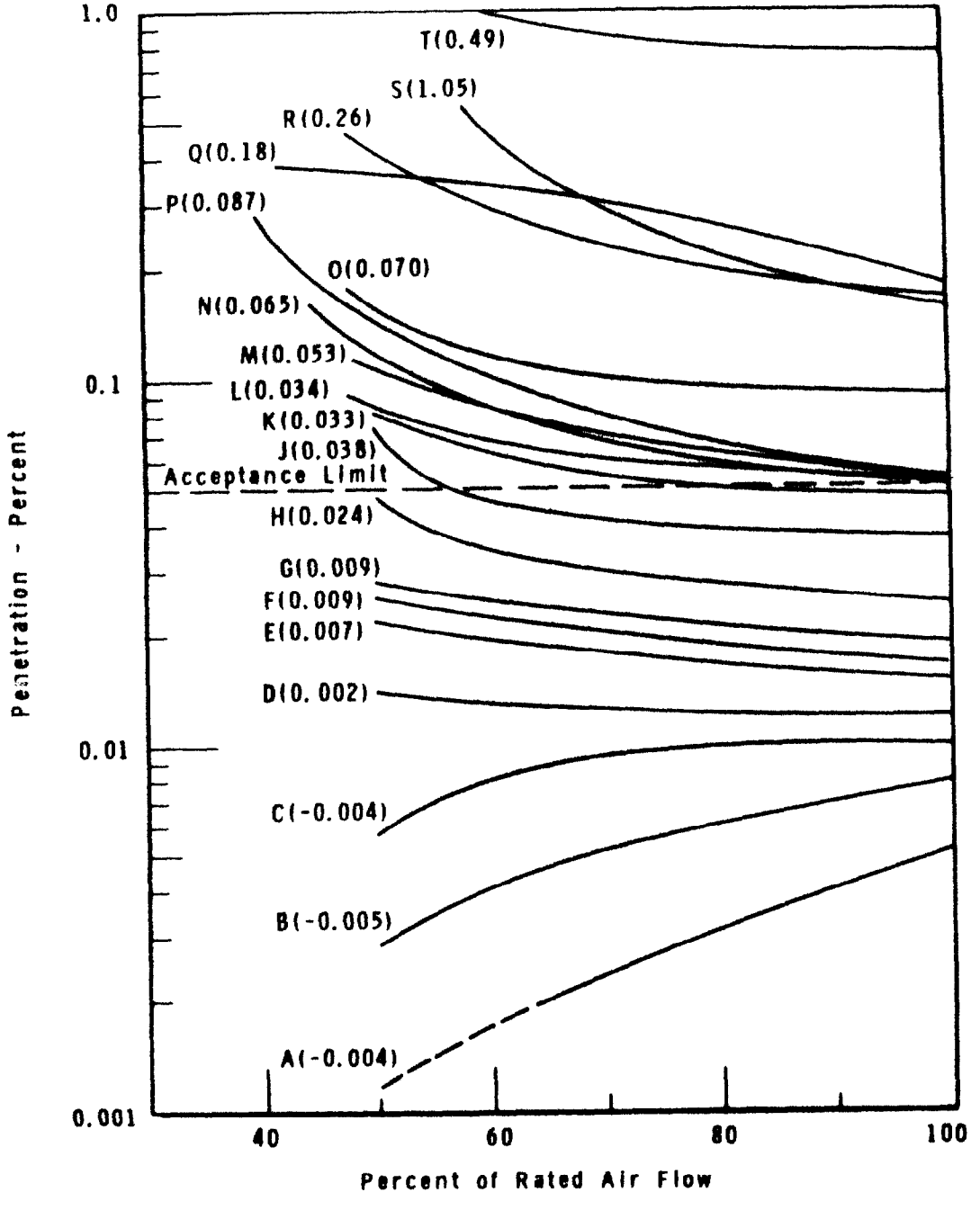
1.0
0.1
0.01
0.001
Penetration - Percent
T(0.49)
S(1.05)
R(0.26)
Q(0.18)
P(0.087)
O(0.070)
N(0.065)
M(0.053)
L(0.034)
K(0.033)
J(0.038)
Acceptance Limit
H(0.024)
G(0.009)
F(0.009)
E(0.007)
D(0.002)
C(-0.004)
B(-0.005)
A(-0.004)
40
60
80
100
Percent of Rated Air Flow

Figure V

with elevated penetration values; whereas, in others, defects were not evident. The changes in percent penetration, for each filter, resulting from a reduction in airflow from 100% to 50% of rated capacity are also shown (Figure V).

An empirical determination of the size of the various defects on the passage of unfiltered air through such filter units was made. Assuming that the intact filter as plotted in Curve A in Figure IV was essentially free of defects, the change in penetration when the airflow was reduced from 100% to 50% of rated capacity was noted. Similar changes were also determined for the filter with one and two 1/8 in. holes as shown in Curves B and D. These values were plotted in Figure VI.

By applying the "penetration change" values from Figure V to the data plotted in Figure VI, it is possible to estimate the approximate equivalent size of a hole which would permit unfiltered air to pass through and cause the filter performance shown. Since the filter defects that may be encountered are of various types (punched holes, incomplete sealing of the adhesive, shear breaks across filter pleats, or cuts which created flap-like breaks) the equivalent hole area must be considered an approximation. A correlation of the filter performance data shown in Figure V with equivalent hole area, from Figure VI, is presented in Table I.

CONCLUSIONS

It is possible to appraise the integrity of a high-efficiency air filter by measuring the change in penetration as influenced by a change in airflow. The tests demonstrated that penetration varied directly as the airflow for filters of good integrity and inversely for filters containing defects.

The difference in airflow through a hole and a filter medium resulting from a given change in pressure drop was demonstrated to account for characteristic performance in good filters and those containing defects. By these performance characteristics it is possible to estimate whether a significant proportion of unfiltered air may be passing through a filter.

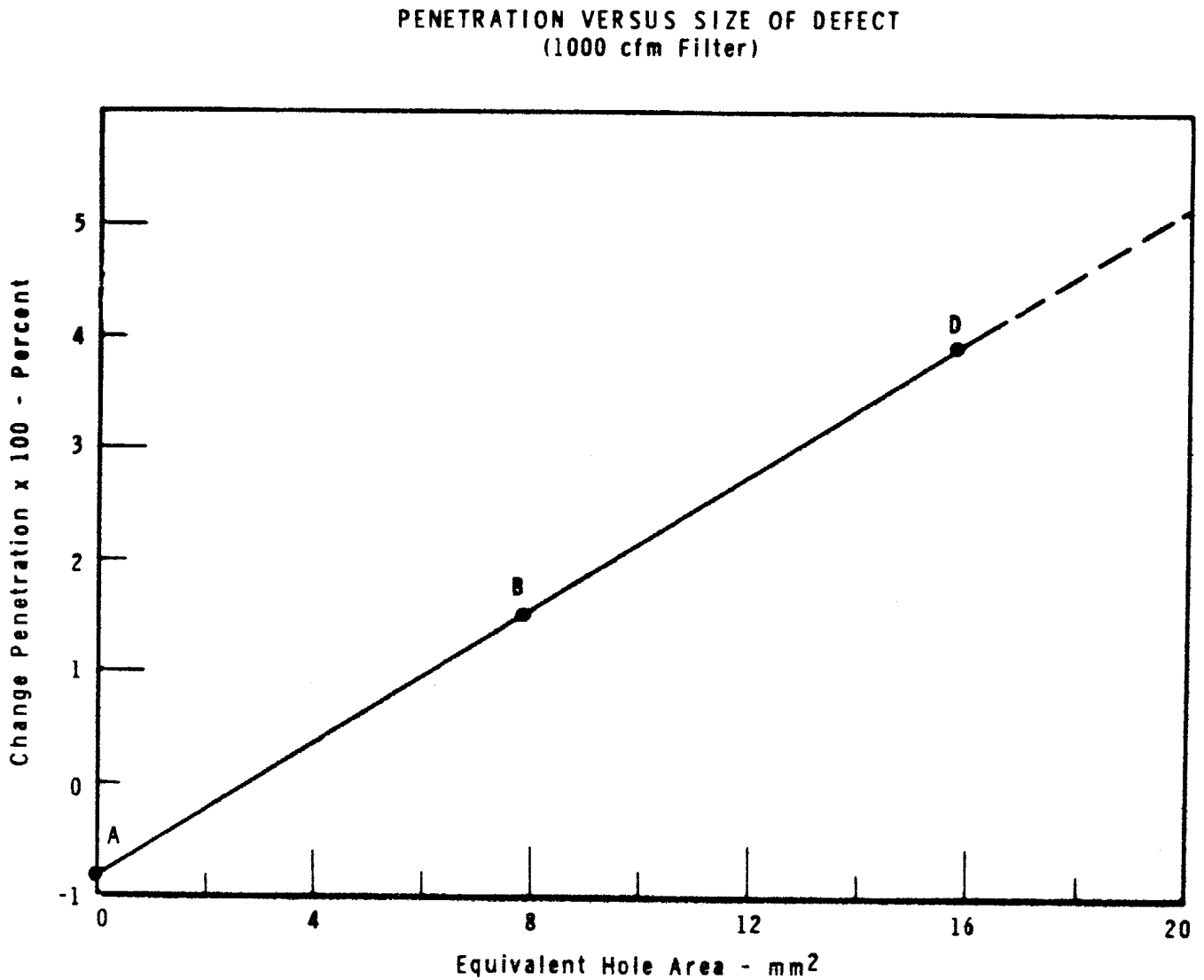
PENETRATION VERSUS SIZE OF DEFECT
(1000 cfm Filter)
Change Penetration x 100 - Percent
5
4
3
2
1
0
-1
A
B
D
0
4
8
12
16
20
Equivalent Hole Area - mm2

Figure VI

Table I

EQUIVALENT HOLE AREA

Filter	Rated Capacity, cfm	DOP Penetration,* Percent	Remarks	Change In Penetration,** Percent	Equivalent Hole Area, mm^2
A	1000	0.005	No Visible Defects	-0.004	1.5
B	1000	0.007	No Visible Defects	-0.005	1.0
C	1000	0.010	No Visible Defects	-0.004	1.5
D	1000	0.012	No Visible Defects	0.002	3.
E	1000	0.015	No Visible Defects	0.007	5.
F	1000	0.016	No Visible Defects	0.009	6.
G	1000	0.019	No Visible Defects	0.009	6.
H	1000	0.024	No Visible Defects	0.024	11.
J	1000	0.036	No Visible Defects	0.038	16.
K	1000	0.047	No Visible Defects	0.033	14.
L	1000	0.053	Shear Break Across Pleats	0.034	14.
M	1000	0.054	Hole in Medium, Punched by Separators	0.053	20.
N	1000	0.052	Two Approximatedly 1/8 in. Puncture Holes in Medium	0.065	24.
O	1250	0.053	Shear Break; Metal Frame, Dry Pack	0.087	(1)
P	1000	0.090	No Visible Defects	0.070	26.
Q	1250	0.180	Shear Break, Core Shifted; Metal Frame, Dry Pack	0.180	(1)
R	1000	0.160	Ends of Filter Pleats Unsealed; Pack Shifted	0.260	88.
S	50, Spec.	0.150	No Visible Defects	0.050	(1)
T	1000	0.760	Shear Break Across Several Pleats	0.490	164.

*At Rated Airflow

**Due to Reduction of Flow from 100% to 50% of Rated Capacity

(1) Data Derived from Figure VI is Applicable for Filter Capacity of 1000 cfm Only.

Due to the disturbance of the air discharging internally from filter holes into pleats or separators, the penetration through a filter is less when the face containing the defect is placed upstream. If the defect is internal or within the filter core this condition would not necessarily hold true. Additionally, this observation would exclude defects which form a flap which might change its configuration depending on the direction of airflow.

It is possible for high-efficiency filters having a penetration as low as about 0.01% at rated airflow to contain defects which permit unfiltered air to pass through the filter. It was shown that there is a semi-quantitative relationship between the penetration level of a filter and the size of any breaks or defects which permit the passage of unfiltered air.

Performance changes in high-efficiency filters as related to variation in airflow suggest the use of this phenomenon as a method for demonstrating the integrity of installed filters, singly or in multiple filter banks. Such tests could demonstrate the presence of defects such as damaged filter media, inadequate seating of filter gaskets on the mounting panel and defects in the mounting panel.

EFFECT OF PARTICLE AGGLOMERATION ON THE PENETRATION OF FILTERS UTILIZED WITH DOUBLE CONTAINMENT SYSTEMS

M. H. Fontana
W. E. Browning, Jr.

OAK RIDGE NATIONAL LABORATORY
Oak Ridge, Tennessee

Foreword

This is the first report prepared under the auspices of the Nuclear Safety Information Center which was established in March 1963 at the Oak Ridge National Laboratory under the sponsorship of the U.S. Atomic Energy Commission. The Center is intended to serve as a focal point for the collection, storage, evaluation, and dissemination of information in the following areas:

1) containment of nuclear facilities;
2) fission-product release, transport, and removal;
3) nuclear instrumentation, control, and safety system;
4) radioactive effluent control monitoring, movement, and dosage;
5) reactor transients, kinetics, and stability; and
6) meteorological considerations.

The present study was requested of the Center by Merson Booth of DRD because of concern which existed regarding the removal of radionuclides by filters following a reactor accident where the radionuclides may be associated with particles significantly smaller than 0.3 μ diam. Inquiries concerning the capabilities and operation of the Center may be addressed to:

Wm. B. Cottrell, Director
Nuclear Safety Information Center
Oak Ridge National Laboratory
P. O. Box Y
Oak Ridge, Tennessee

Abstract

The penetration of filter systems in dual containment systems by fission products adsorbed on particulate matter was studied theoretically. A simplified model was analyzed in which the particulate matter was assumed to be pure iodine, and all particulates having diameters less than 0.3 μ were assumed to penetrate the filters. It was shown that agglomeration would occur rapidly enough so that the particles, even though initially much smaller, would reach a 0.3-μ size in a short time (< 20 min for typical water-reactor systems). This time is directly proportional to the containment volume and inversely proportional to the power level. Assuming that the filter efficiency of the secondary containment sweep gas filtration system is zero for particles less than 0.3 μ, the fraction of the core activity released to the atmosphere during that time was calculated for some conditions of interest. For one reactor system treated, less than 10^{-5} of the iodine available would be released. It was shown that conditions existing during a reactor accident could not be as pessimistic as those of this model.

Introduction

The penetration of filters by fission products adsorbed on submicron particulate matter has been of some concern to those responsible for the performance of nuclear reactor containment systems employing filtration as a means of limiting activity release. The efficiency of absolute particulate filters is known to be > 99.95% for particles of 0.3 μ, but the filtration efficiency is not known, with comparable certainty, for particles of substantially smaller size, e.g., in the range 20-40 A. It is known, however, that particulate matter of a high particle-count density per unit volume as would exist after a reactor accident would agglomerate at a rapid rate to a smaller number of larger particles.

This memorandum summarizes the results of a simplified analysis of the effects of particle agglomeration on the activity release from a containment system that depends on particulate filtration for its effectiveness. The case treated here is that of a dispersion of activity into a primary volume, such as the first containment, and its leakage into a secondary volume in which a sweep air flow is maintained and filtered before it is exhausted into the surroundings. The secondary barrier is thus made effective in that all leakage from the surroundings flows into it and all activity that is released is filtered. Some examples of this kind of containment are the N.S. SAVANNAH and the Hallam reactor.

Method of Analysis and Assumptions

A calculation of particulate agglomeration was performed on a simplified model which is shown to be conservative. Since iodine is of major concern in filtration problems, it was chosen to illustrate the particle behavior. Only the particulate form of iodine is treated. It is assumed that iodine remaining in vapor form is removed by adsorbers. The analysis was performed in the following manner: 1) It was assumed that all the iodine isotopes existing in the reactor core after full-power full-life operation were released at the time of the accident and evenly dispersed within the primary containment vessel as an infinite number of small particles. 2) The iodine agglomerated as a monodisperse pseudoaerosol of pure iodine yielding particle sizes as a function of time. 3) All of the pseudoaerosol (i.e.,

the material with particle size < 0.3 μ) that leaked out of the primary containment penetrated the secondary containment filtration system. 4) The amount of iodine being released during this time period of zero filter efficiency was calculated and presented.

The agglomeration calculations were performed using the relationship:[1]

$$\frac{1}{n} = \frac{1}{n_o} + Kt \tag{1}$$

where

n = number of particles/cm^3 at time t (cm^{-3}),

n_o = number of particles/cm^3 initially (cm^{-3}),

t = time (sec), and

K = agglomeration coefficient (cm^3/sec) taken as 5×10^{-10} (ref. 1).

The value n was related to the concentration of matter in air by the equation:

$$\frac{m}{V_1} = \rho \frac{\pi}{6} d^3 n \tag{2}$$

where

m = total mass of material making the particles (gm),

V_1 = total free volume of the primary containment (cm^3),

ρ = density of the particle (gm/cm^3), and

d = diameter of particle (cm).

Substituting Eq. 2 into Eq. 1 yields the time required to reach a given diameter.

$$t = \frac{d^3 \pi \rho}{6 \frac{m}{V_1} K} - \frac{1}{n_o K} \tag{3}$$

Since n_o is large, the last term is negligible.

The diluting effect of the sweep gas in the secondary containment was considered because the filters were located in this system. The ratio of the rate of activity released from the secondary containment to the activity release rate from the primary containment is shown in Appendix A to be:

$$\frac{C_2 Q_{23}}{C_1 Q_{12}} = 1 - e^{-(Q_{23}/V_2)t} \qquad (4)$$

where

C_2 = concentration of material of interest in the secondary containment (curies/cm^3),

Q_{23} = sweep gas volumetric flow rate (cm^3/sec),

C_1 = concentration of activity in primary containment (curies/cm^3),

Q_{12} = volumetric leak rate from the primary containment (cm^3/sec), and

V_2 = volume of secondary containment (cm^3).

The integrated release from the secondary containment up to time, t, compared to the rate of release from the primary containment can easily be shown as:

$$\frac{A_{23}}{IR} = t - \frac{V_2}{Q_{23}} [1 - e^{-(Q_{23}/V_2)t}] \qquad (5)$$

where

A_{23} = total integrated activity released to time t (curies),

I = total activity inventory in the primary containment available for release (curies), and

R = primary containment release rate (%/sec).

Results

Figure 1 is based on Eq. 3 and shows the particle size as a function of time for seven values of (m_1/V_1) and a particle density of 4.93 g/cm^3, corresponding to elemental iodine. Curve E shows the values for the N.S. SAVANNAH, this being an example of the containment system studied herein.

Figure 2 shows the performance of the secondary containment sweep gas system, relating the total activity released up to time t, for three values of the volume change times (V_2/Q_{23}). Curve E of Fig. 1 is superimposed on Fig. 2 to show the procedure for finding the worst case operation of the system, assuming that all activity, I, is in particulate form and all that is released from the primary containment prior to the time that the critical particle size is attained passes through the

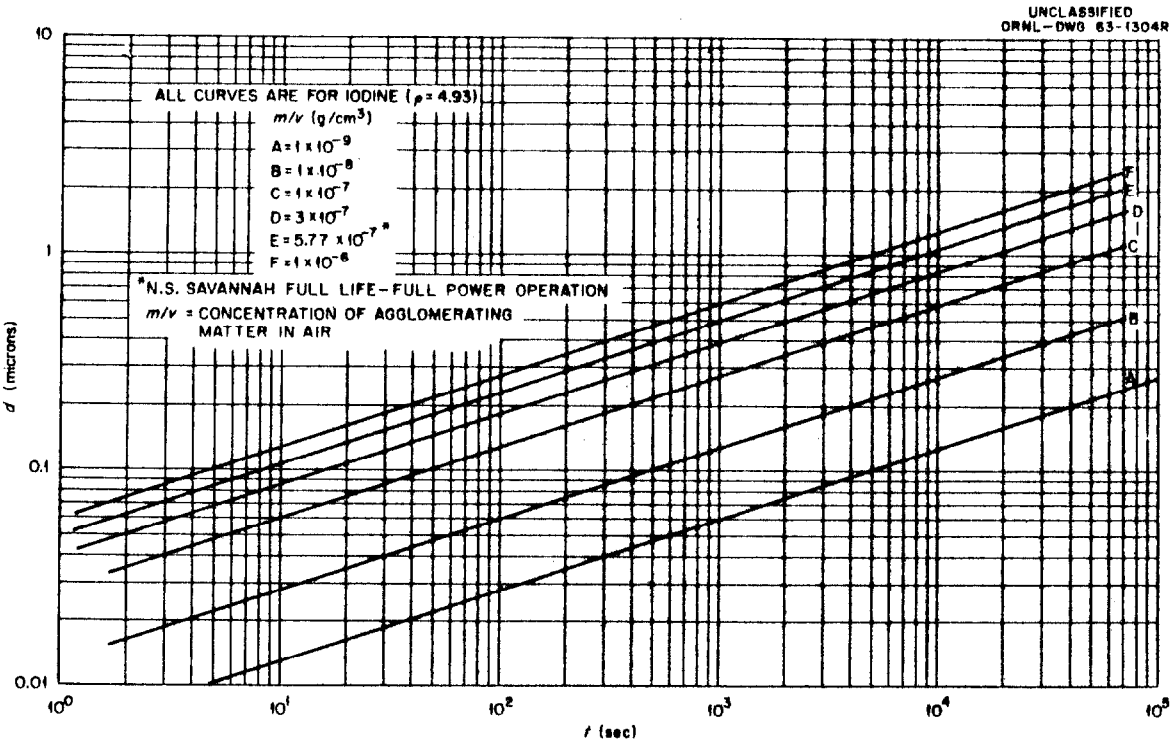

Fig. 1. Particle Size vs Time as Controlled by Agglomeration.

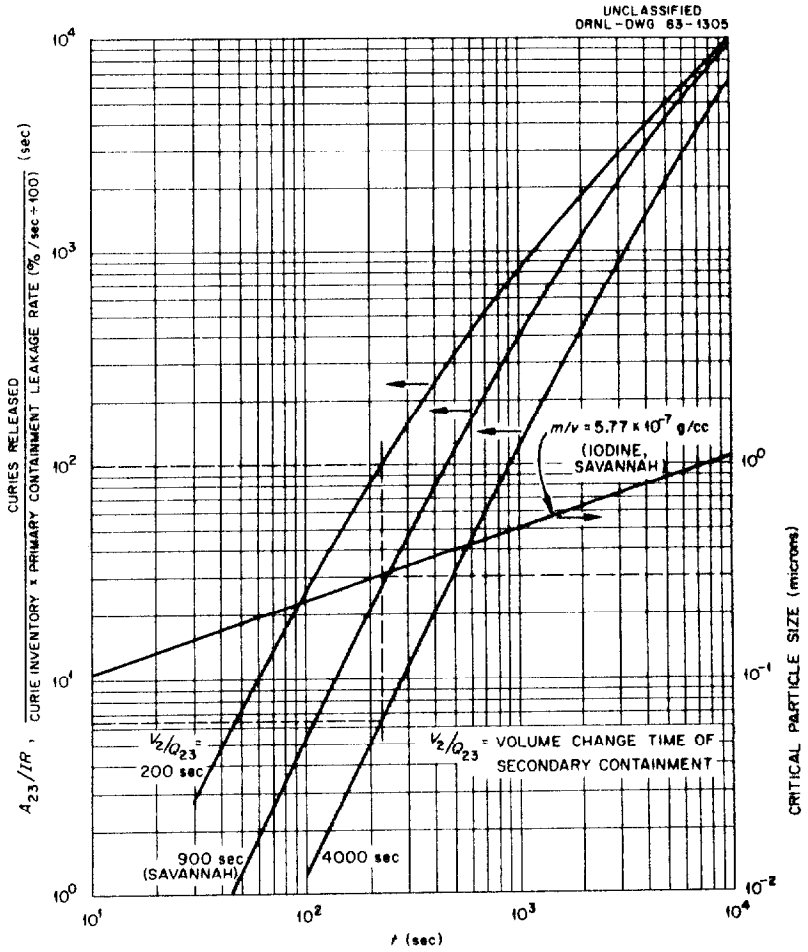

Fig. 2. Total Activity Released During Period of Zero Filter Efficiency per Release Rate vs Time.

filtering system in the secondary containment. For example, if 0.3 μ is chosen as the critical particle diameter, it can be seen that if the core inventory of iodine is the only material available to make particles, this size will be reached in 235 sec. The N.S. SAVANNAH has a secondary containment volume change time of 900 sec, and this curve shows that the total release to the atmosphere is $A_{23}/I = 26$ (R). Since the N.S. SAVANNAH primary containment has a maximum leakage rate of 3%/day.

$$R = \frac{0.03}{8.65 \times 10^4} \text{ sec}^{-1} = 3.47 \times 10^{-7} \text{ sec}^{-1}$$

The ratio of total activity released to that available is

$$\frac{A_{23}}{I} = 26\ (3.47 \times 10^{-7}) = 9.02 \times 10^{-6}$$

Table I shows the core inventory and amounts released to the surroundings for the N.S. SAVANNAH for the case of 0.3 μ critical aerosol diameter.

TABLE I

Activity Release for the N.S. SAVANNAH Conditions

Nuclide	Core Inventory (curies) (600 day at 69 Mw)	Amounts Released (curies)
8.05 d I^{131}	2.29×10^6	20.6
20.8 h I^{133}	2.05×10^6	18.5
6.68 h I^{135}	2.01×10^7	181

Discussion

A. Validity of the Agglomeration Equation. Equation 1 has been shown to hold ever since reliable methods of counting the particles in smoke clouds have been available.[1] Theoretical expressions for coagulation of monodisperse particles can be shown to be:

$$\frac{1}{n} - \frac{1}{n_o} = \frac{4\ R\ T}{3\ \eta\ N}\left(1 + \frac{A\ell}{r}\right)t \qquad (1\text{-a})$$

where

R = gas constant,

T = absolute temperature,

η = viscosity of the medium, and

N = Avagadro's number.

The term $[1 + (A\ell/r)]$ is the Cunningham correction factor for non-Stokes behavior of very small particles where

A = a constant (~ 0.9),

ℓ = mean free path of the molecule, and

r = radius of particle.

From Eq. 1-a it can be seen that the coagulation coefficient

$$K = \frac{4\,R\,T}{3\,\eta\,N}\left(1 + \frac{A\ell}{r}\right)$$

would decrease as the radius increases. Experimentally determined graphs of t vs 1/n are straight lines within the limits of experimental error except for the case of very small particles for which there is an indication of curvature. The use of this theoretical expression for K for air at standard conditions and a standard stearic acid cloud yields $K = 5.1 \times 10^{-10}$ cm^3/sec. The use of $K = 5.00 \times 10^{-10}$ cm^3/sec in this analysis in Eq. 1 appears justified on a conservative basis.

B. Effect of the Assumption of Particulates Made of Pure Material. The artifice of assuming that all of the iodine coagulates into particulates of pure iodine is a useful concept that can be shown to be conservative. Actually, in the case of a real accident, some of the iodine would remain in the vapor form and some would deposit on particulates caused by debris and smoke concurrent with fuel meltdown. Taking the case of all the iodine depositing on particulates of other matter, then the m of Eq. 3 must include the iodine plus the other debris and must be larger than the case of pure iodine; e.g.,

$$m_t = m_o + m_I \tag{6}$$

where

m_t = total mass (g),

m_o = mass of foreign matter (g), and

m_I = mass of iodine (g).

It can be seen from Eq. 3, however, that the time required to reach a critical, filterable diameter is directly proportional to ρ_t/m_t. Since $\rho_t/m_t = 1/V_p$, where V_p is the volume taken up by the particle, substitution into Eq. 3 shows that:

$$t = \frac{d^3\pi}{6K\,(V_p/V_1)} \tag{3a}$$

That is, the time to reach a given diameter is inversely proportional to the ratio of the volume taken up by the particles to the total free volume of the containment vessel. (Note, however, that V_p/V_1 must be very small for Eq. 1 to hold.)

Equation 3a shows that if foreign matter is added to the iodine, the time at which filtration is effective will be shorter.

C. <u>The Case Where Less than the Total Inventory of Iodine is Available to Make Particulates</u>. In a real accident, much of the iodine will be immobilized shortly after a meltdown by deposition on surfaces or otherwise or will remain in elemental form and will be effectively scavenged by the charcoal adsorption system and therefore will not contribute to the effects under scrutiny in this study.

The amount of activity released from the primary containment vessel is:

$$A_{12} = IRt \tag{7}$$

where

A_{12} = total activity released from the primary to the secondary containment.

Substituting Eq. 3 for t:

$$A_{12} = \frac{IR\,\pi d^3}{6\,(m_1/V_1)\,K} \tag{7a}$$

Since the core activity inventory, I, refers to that available for release, I is associated with m_1, the mass available to make particulates, so that I/m_1 is a constant for a given accident condition. Therefore, the activity released from the primary containment to the secondary

containment that would be eventually released from the secondary containment, assuming that further agglomeration does not occur in the secondary containment, is independent of the amount available for release. It is obvious that minimizing I/m reduces the total activity released. Thus, the presence in the smokes of foreign matter of low specific activity, such as structural materials, unfissioned uranium, etc., would decrease the release of important activity associated with it.

D. Effect of Polydispersity. The usual effect of a size distribution in a cloud of particulates is to promote agglomeration at a faster rate than would occur in a cloud of equal-sized particles.[1] Experiments at ORNL[2] have shown that the amount of 20-40 A iodine-bearing particulates after aging is relatively independent of the initial concentration of iodine in the source of the experiment. This can be interpreted to mean that agglomeration and settling accounts for the major amount of iodine leaving a small residue of small particulates that would agglomerate at a slower rate because of depleted particulate population.

Although not proved, it appears that the assumption that all particles of a size below 0.3 μ penetrate the filter and the faster agglomeration rate of the polydisperse particles introduce a greater degree of conservatism to this worst case analysis than could be disputed by neglecting the trace amount of small particulates that has not undergone agglomeration up to the time of filtration.

E. Effect of Different Materials. The agglomeration coefficient, K, is relatively independent of the material. Green and Lane[1] quote values for nine different aerosols which range from 4.9×10^{-10} cm^3/sec to 8.3×10^{-10} cm^3/sec. A value of 5×10^{-10} was used in this calculation because it lay in the low range of quoted values and would be conservative as seen from Eq. 3.

F. Effect of Electrical Charge. Green and Lane[1] state that the effect of monopolar electrical charge is not great. In fact, where large and small particles coexist, or where there are differences in charge magnitude, coagulation is increased by the mechanism of induced charges. Although this is a complex phenomenon to describe, it is not expected to have too great an effect for the case in question.

G. Limiting Size of Agglomerated Particles. Agglomeration according to Eq. 1 may be expected to take place with the particles coagulating to a size large enough to settle due to gravity. When it is considered that a particle of 1 μ diameter of specific density = 4.93 would settle at a rate of 0.0172 cm/sec in air, it can be seen that settling would not be an important depletion mechanism in the 0.3-μ size range.

Conclusions

From the results of this simplified analysis, it appears that fission-product penetration of filtration units by transport of particulate matter should not be a great problem because, with a high population density, as would exist after a catastrophic reactor accident, the particles would agglomerate in a very short time to a size readily removable by filters.

The amount of activity released from a dual containment system as analyzed herein is dependent on the specific activity of the particulate debris. That is, a given amount of activity dispersed over a large amount of cooler debris would result in less total activity released to the atmosphere than would be the same amount of activity associated with a smaller amount of debris.

Following the above argument, the extreme of conservatism is the case where the debris is pure radionuclide, in this case, iodine. This analysis shows that agglomeration occurs at a rate fast enough to prevent significant penetration of the filtration systems even if all particulates of a size smaller than 0.3 μ were assumed to penetrate the filters. In one example the calculated amount of iodine released would be less than 10^{-5} of that available.

References

1) H. L. Green and W. R. Lane, Particulate Clouds, Dusts, Smokes and Mists, E. & F. N. Spon, Ltd., London, 1957, pp 126 et seq.

2) W. E. Browning, unpublished work, 1962.

APPENDIX A

Derivation of Equations Describing Total Activity Released from a Dual Containment System

The schematic of the system is shown in Fig. A.1.

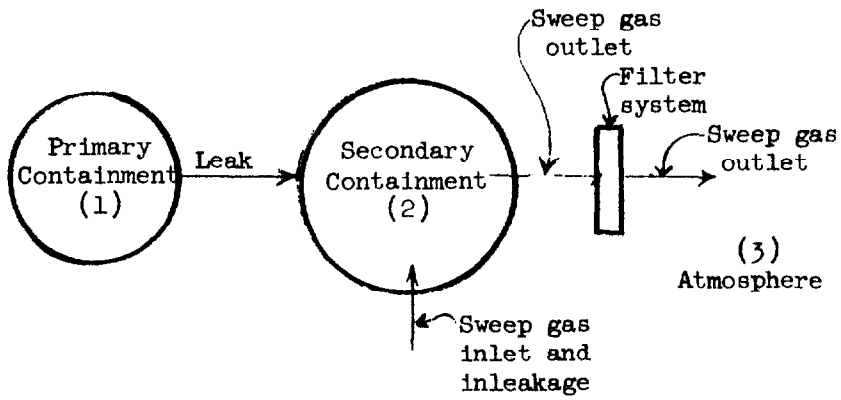

Fig. A.1. Schematic of dual containment system.

The mass balance in the secondary containment is:

$$C_1Q_{1-2} - C_2Q_{2-3} = \frac{d}{dt}(C_2V_2) \qquad \text{(A-1)}$$

where

C_1 = concentration in primary containment (x/cm^3),

C_2 = concentration in secondary containment (x/cm^3),

Q_{12} = volumetric flow rate from primary containment to secondary containment, leakage (cm^3/sec),

Q_{23} = sweep gas flow rate from secondary containment to the atmosphere (cm^3/sec),

V_2 = volume of secondary containment (cm^3), and

t = time (sec).

Rearranging:

$$\frac{dC_2}{dt} + \frac{C_2}{V_2}Q_{23} = \frac{C_1}{V_2}Q_{12} \qquad \text{(A-2)}$$

Solving by integrating factors:

$$C_2 \, e^{(Q_{23}/V_2)t} = \frac{C_1}{V_2} Q_{12} \frac{V_2}{Q_{23}} e^{(Q_{23}/V_2)t} + a_1 \qquad \text{(A-3)}$$

where a_1 is a constant of integration.

When $t = 0$, $C_2 = 0$. Therefore:

$$a = -\frac{C_1}{V_2} Q_{12} \frac{V_2}{Q_{23}}$$

Substituting into Eq. A-2 and rearranging yields:

$$\frac{C_2 Q_{23}}{C_1 Q_{12}} = 1 - e^{-(Q_{23}/V_2)t} \qquad \text{(A-4)}$$

The total amount released up to time, t, is:

$$A_{23} = \int_0^t C_2 Q_{23} \, dt'$$

Therefore,

$$A_{2-3} = C_1 Q_{12} \int_0^t [1 - e^{-(Q_{23}/V_2)t'}] \, dt'$$

since C_1 and Q_{12} were assumed to be constant. Integrating:

$$\frac{A_{23}}{IR} = t - \frac{V_2}{Q_{23}} [1 - e^{-(Q_{23}/V_2)t}] \qquad \text{(A-5)}$$

since

$$C_1 Q_{12} = IR$$

where

I = inventory of quantity in question in primary containment available for release (curies, lb, etc.), and

R = primary containment leakage rate (%/sec) × 100.

MAINTENANCE PROBLEMS ENCOUNTERED IN THE SERVICING OF FILTER INSTALLATIONS

W. S. Hornbaker
Oak Ridge National Laboratory

Oak Ridge National Laboratory has numerous 100 per cent fresh air systems providing temperature and some degree of humidity control of air supplied to offices, laboratories, and process control rooms. In general, air flow is through offices and corridors into laboratory or processing areas where additional direct air supply maintains the required air volume to be removed through chemical fume hoods by attic exhaust fans. Exhaust from all potentially hazardous operations passes through individual high-efficiency filters ahead of the individual fans. The filtered air is discharged above roof level.

In two areas of the facilities recently constructed, large banks of filters have been incorporated in both intakes and exhausts. From the viewpoint of maintenance requirements, there are a number of deficiencies which should be avoided in future designs. For example, the air intake to one building contains 174 Aerosolve 3A95 units, 24" x 24" x 12" deep, with a face-mounted 2-inch-thick throw-away prefilter. These are arranged 6 units high by 30 units long in a flat bank. Clearance to the intake louvers and dampers is less than $3\frac{1}{2}$ feet. The 12-foot height requires the use of ladders or scaffolding for access to the upper half of the bank. Further complications arise from the location of a single access door at one end of the plenum. Handling of clean and dirty filters must necessarily "cross-over" at the expense of additional labor. A permanently installed, traveling scaffold is contemplated to improve safety and to reduce handling time in this installation.

A similar installation of 90 Type 3D95 Aerosolves, 24-inch deep with prefilters, is also 12 feet high and is further complicated by a front clearance of less than $3\frac{1}{2}$ feet. Both this intake and the one previously described are at grade. Since completion of construction and establishing a stand of grass, the life expectancy of these installations is in the order of 15 months, depending on weather conditions. Where economics permit, it would be desirable to locate intakes as far above grade level as possible.

The exhaust systems associated with the 174-unit intake are 12 in number and contain from 3 to 60 high-efficiency filter units with face-mounted throw-away prefilters. Two banks containing 28 and 16 filter units are stacked four high, making the use of step ladders necessary when servicing the upper row. All other systems are three units high and can readily be serviced from floor level. This building was designed for control of both radioactive and toxic materials. The filters in all exhaust systems operating over the past year and a quarter have been changed out recently. Radioactivity and toxicity levels were below tolerance in all systems indicating the care taken by research personnel to contain such materials within their equipment. In the event of an accident within this facility, the exhaust systems will afford a high degree of

protection to the occupants of adjacent facilities.

These exhaust systems are located in a rooftop penthouse. Fans are located toward the central open area with access doors to the clean side of the filters near the fans. Filters have been designed for changing from the dirty side. Access is hindered by being on the perimeter of the penthouse area and by the adjacent plenums. Thus on the largest banks, dirty filters are bagged up at the plenum door and carried to an open area for boxing and second bagging as conditions warrant. If a high activity level were ever to be accumulated on these filters, the handling and temporary storage prior to removal from the penthouse would constitute a serious exposure problem. Handling of materials into and out of the penthouse requires the use of a motor crane between ground level and the roof and manual labor to hand carry between the penthouse and the roof edge. A study is to be made based on the experience gained in the recent filter change to improve material-handling operations.

A large number of sizes and types of filters are required in servicing the many facilities at the Oak Ridge National Laboratory. These are stocked by the Finance and Materials Division. On large installations of high-efficiency filters, an effort is made to coordinate original delivery direct to the point of use just prior to the need for a filter change, thus minimizing the unnecessary handling of the high-efficiency units. Such action is not usually appropriate where individual hood filters are changed on-the-spot basis. Depending on the nature and level of contamination, filters are destroyed by burning or burying. A simple effective method of reduction of volume is needed for the disposal of high-efficiency filters containing high levels of contamination. At present, burial accomplishes the desired end result at the expense of three to four times the actual solid volume in a filter unit.

Necessity for filter change is based on the pressure drop across the filter bank and the ability of the fan to move the rated air flow which has been reached or slightly exceeded. Since the investment in high-efficiency filters is high, it is imperative that their service life be extended to obtain the maximum value. Improved means of determining the air flows and pressure drops are being provided on all critical exhaust systems.

The physical condition of the filters may deteriorate due to chemical fumes or a mechanical failure or rupture might occur during the service life of an installation. In the existing systems there is no way to determine the condition of the units without shutting the system down and making an inspection of the filters in place. One suggestion has been advanced to install a removable test coupon in the supply air stream. Periodic removal and evaluation of the specimens would provide a basis for evaluating the condition of the main bank. This idea has been developed further in discussions with several others. As now envisioned, a bypass duct would contain both a prefilter and main filter with manometers to measure the individual pressure drops and DOP test connections. Flow would be equivalent to that through the main bank and be representative as of the suspended and entrained materials. This installation could thus provide factual data on the conditions in the main bank as follows:

1. DOP test at intervals of three or four months would indicate trend in dirt accumulation or chemical attack of media.

2. Pressure drop indications would evaluate need for change of prefilter or both prefilter and main unit.

3. Being located in a bypass duct, the filters would be capable of being isolated and removed for sampling and analysing for potential radioactive and toxic hazards.

4. Filter changing would be simplified by having complete hazard data in advance without having to shut down a system, obtain samples for analysis, and start the system back up. At present, such sampling must either be done in advance with full protective measures or at the initiation of filter replacement with full protective measures in force which can be relaxed upon receipt of analytical reports.

5. Direct examination would detect the development of detrimental conditions before failure could occur.

From the viewpoint of the maintenance personnel, many improvements could be made in the initial installation to make our job simpler. It is evident, however, that each such "improvement" incorporated into a design increases the cost. Therefore, each one must be considered on its own merits, installation cost versus improved operational cost, and considerations of safety and health.

In conclusion the following points are suggested for consideration in the design of new installations as applicable:

1. Provide individual lighting in each plenum with external switch and pilot light. Use of submarine-type light fixtures arranged for relamping from exterior of plenum.

2. Provide visual inspection windows on both clean and dirty sides of plenum.

3. On large banks provide bypass arrangement to evaluate conditions in main bank.

4. Limit height of banks to approximately six feet or provide permanent walkways and steps within plenum and make the bank a little over 12 feet high.

5. Clamping and sealing of filters to frames should be simple, positive and made of noncorrodible material.

6. Provide adequate but not excessive clearances for ease of insertion and removal. (36" minimum aisle width, from main area to plenum doors.)

7. Provide adequate working area and storage space to accomplish a filter change. Specifically, space should be available for storage of a complete complement of clean filters plus sufficient area to unbox and inspect sufficient filters to service the largest system in the group.

8. Consider the material-handling problems in respect to filter bank location and means of access.

9. Provide for adequate flow and pressure measurement and excess pressure drop indication and/or alarm.

10. Avoid use of fans having a bearing within the air stream; i.e., select a single inlet fan with cantilever support.

11. Reinforce plenum structure to prevent drumming or pulsations which may affect the filter media.

A DISPOSABLE LIGHT CHAMBER FOR THE NAVAL RESEARCH LABORATORY PERCENT PENETRATION METER

E. C. Parrish and R. W. Schneider
Oak Ridge National Laboratory

INTRODUCTION

In situ DOP tests of high-efficiency particulate filters are sometimes complicated by system conditions which result in contamination of test equipment. Obviously, systems which are likely to contaminate test equipment are those most in need of efficiency tests. When equipment becomes contaminated it must be discarded, decontaminated, or handled in such a way that the activity is not spread.

The routine in situ DOP test at ORNL involves withdrawing samples of the aerosol from both sides of the filter bank under test and passing these samples through the light chamber of an NRL Percent Penetration Meter [1]. The instrument arrangement is shown in Fig. 1.

Figure 2 is a cross section of an NRL forward-light-scattering photometer and shows the parts of the instrument which are exposed to the aerosol samples. Included, are parts of the permanent lens system, the hardwood conical liners with their machined connector ring, and the metal shell of the light chamber.

The cost of replacement or decontamination of these parts adds significantly to the cost of in situ testing and, in addition, safe use and storage of contaminated instruments is troublesome and time consuming. One alternative is to replace the light chamber of the NRL photometer with an inexpensive, disposable unit when testing systems which are likely to cause instrument contamination. Figure 3 shows a standard NRL photometer and an NRL photometer with the disposable chamber installed.

---

[1] H. W. Knudson and L. White, Development of Smoke Penetration Meters, Report NRL-P2642, (September 14, 1945).

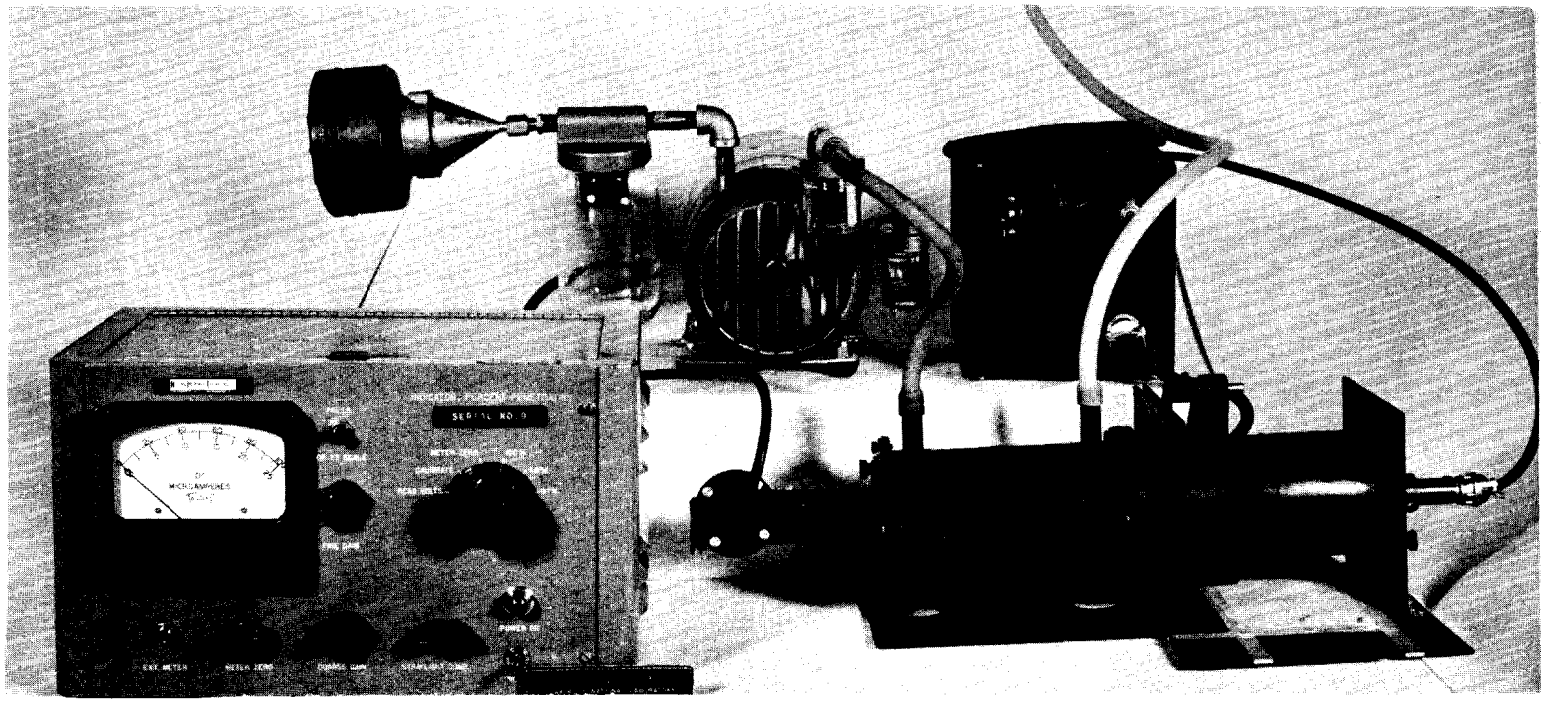

Fig. 1. Naval Research Laboratory Type Photometer, Amplifier, Transformer and Pump.

UNCLASSIFIED
ORNL-LR-DWG 77999R

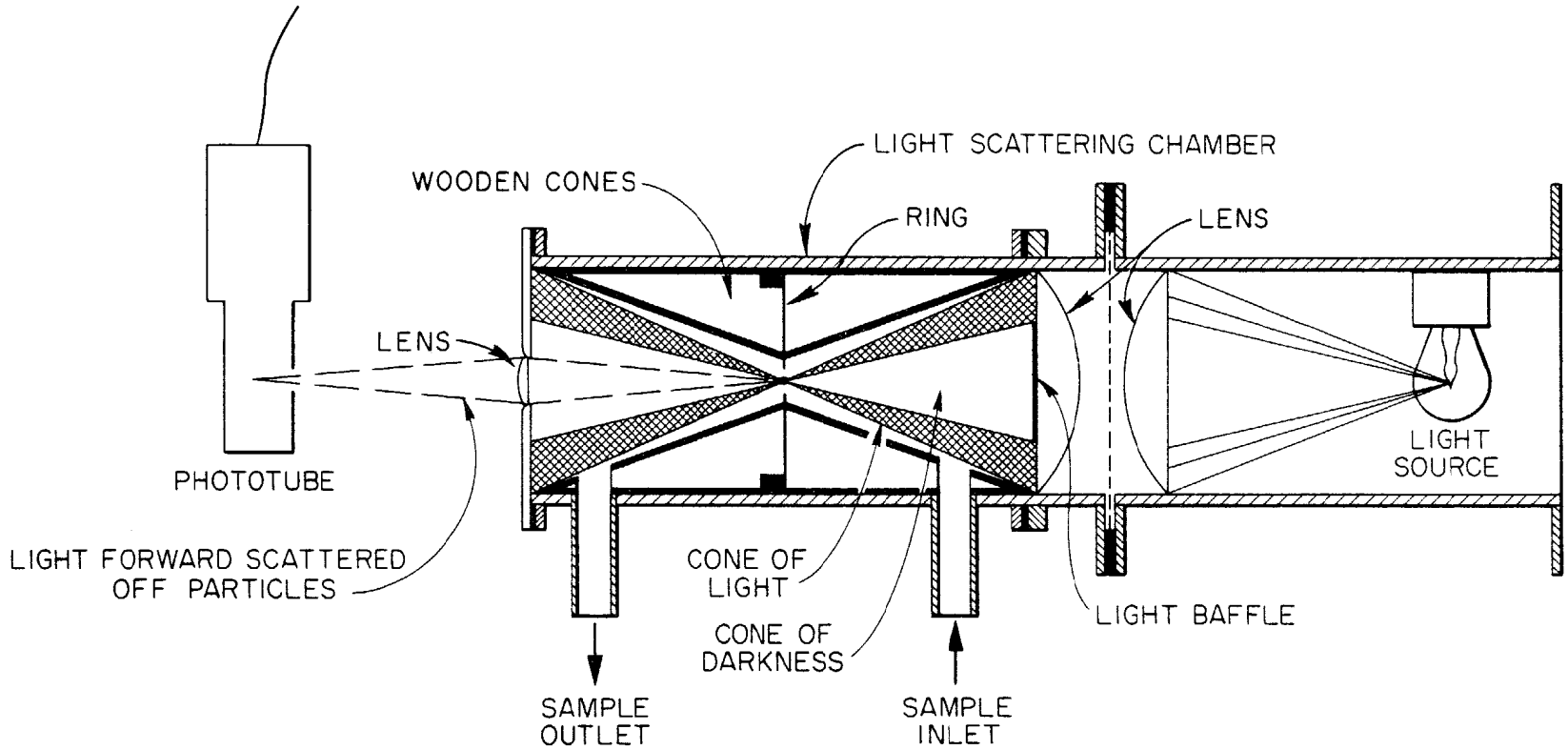

Fig. 2. Cross Section of a Forward-Light-Scattering Photometer.

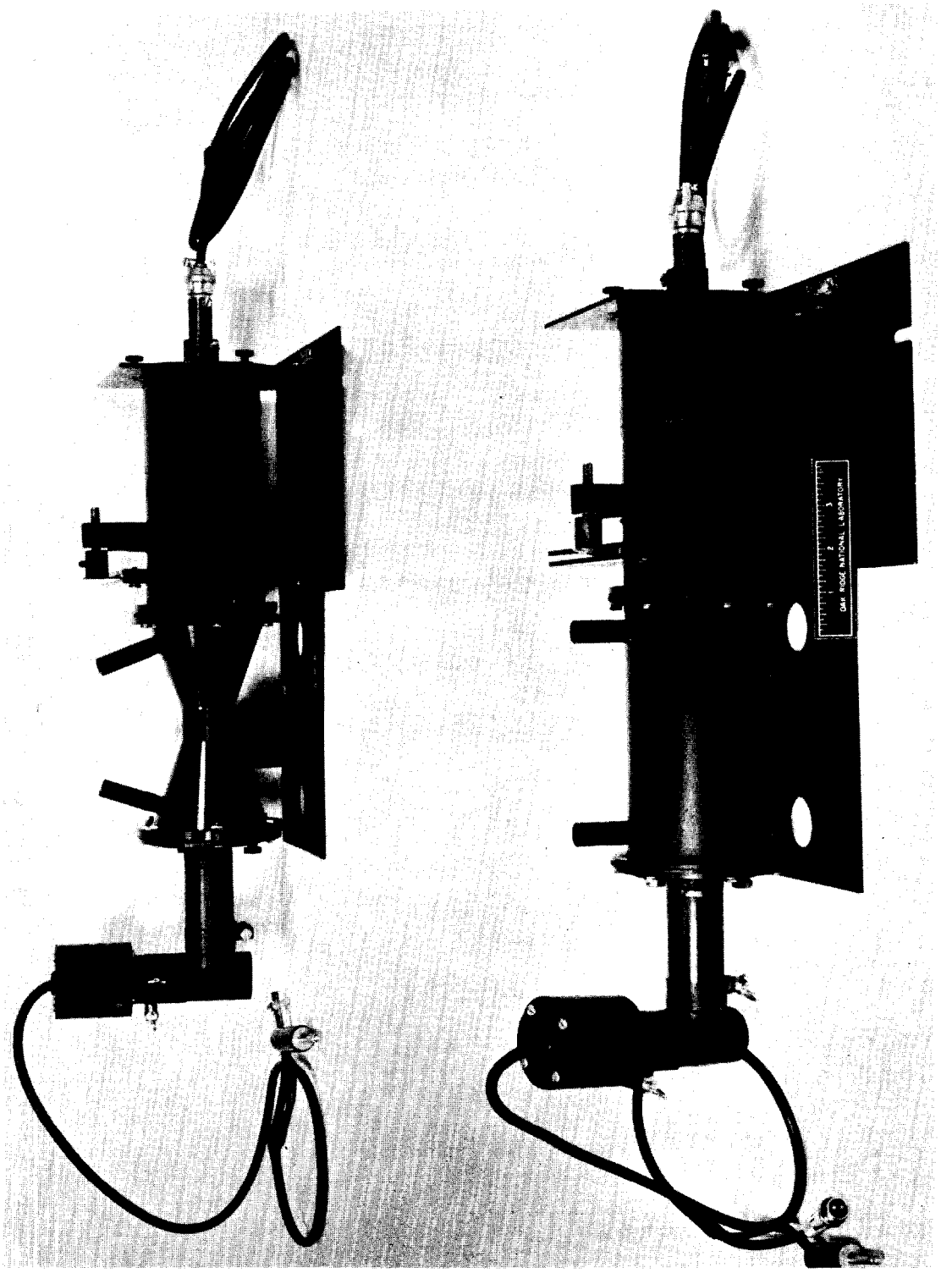

Fig. 3. Upper, NRL Photometer with Disposable Light Chamber.
Lower, NRL Photometer with Commercial Light Chamber.

DESCRIPTION OF DISPOSABLE LIGHT CHAMBER

Figure 4 shows the components and the assembly details of the disposable chamber. The body is made by cementing together two identical epoxy resin castings, the internal dimensions of which duplicate those of the commercial unit. Glass discs cemented in place seal the ends and thus contain contaminants within the disposable unit. The non-transmitting areas of the glass discs are covered with a non-reflective paper to reduce internal scattering of light.

Figure 5 shows the disposable unit connected for use; the gas mask canister filter in the exit sample line prevents radioactive particulate matter from reaching the vacuum pump. The canister, disposable light chamber and the sample line tubing are discarded after the in situ test as shown in Fig. 6.

PERFORMANCE TESTS

The effect of the added glass in the optical system was investigated by checking the linearity of the instrument at high and low concentrations and by a correlation check between two, NRL Percent Penetration Meters; one equipped with a commercial light chamber, and the other equipped with the disposable unit.

The linearity in the high concentration range was checked as follows: an aerosol generator was arranged to produce a constant amount of smoke, and concentration was measured as the air flow in the test rig was varied between 390 cfm and 1370 cfm.

If the measured concentration is inversely proportional to the air flow, the instrument may be assumed to be linear over the range of concentrations used. The inverse proportionality criterion was applied to the concentration measured at 800 cfm, since reasonable precision in the measurement of both flow and concentration may be expected near the mid-point of the curve. The data are shown in Fig. 7. The agreement between the experimental curve and the predicted curve is satisfactory and closely parallels the results of a similar test made on the commercial NRL photometer [2].

Next, a filter with a metered bypass was installed in the test rig as shown in Fig. 8. The output of the aerosol generator was held constant, and the downstream concentration was measured over the range of bypass flows indicated by the curves of Fig. 8. Curve A indicates that the photometer with a disposable chamber is linear in the low concentration range.

---

[2] E. C. Parrish and R. W. Schneider, Tests of High-Efficiency Filters and Filter Installations at ORNL, Report ORNL-3442, (May 17, 1963).

UNCLASSIFIED
ORNL-DWG 63-4045

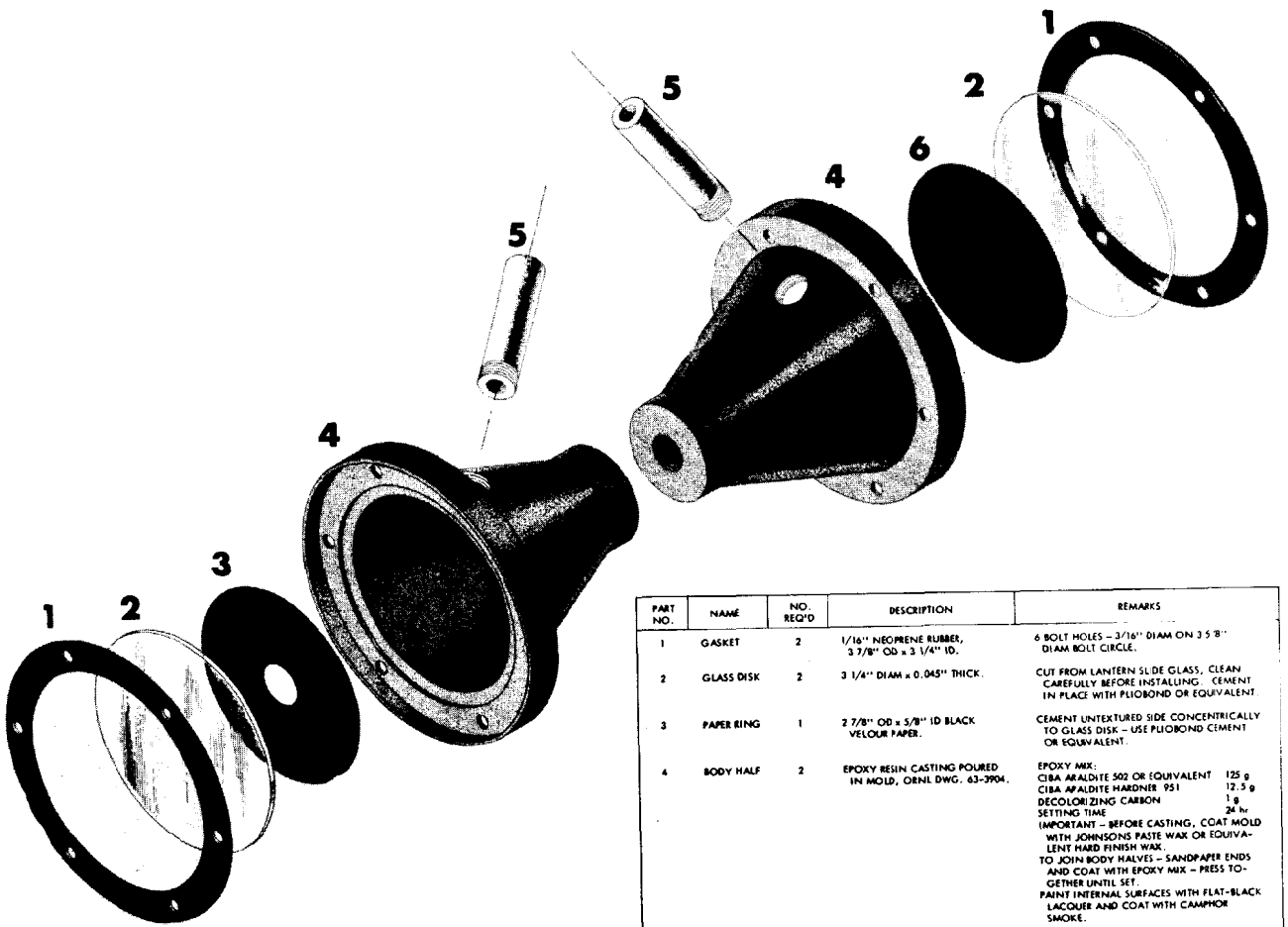

PART NO.	NAME	NO. REQ'D	DESCRIPTION	REMARKS
1	GASKET	2	1/16" NEOPRENE RUBBER, 3 7/8" OD x 3 1/4" ID.	6 BOLT HOLES – 3/16" DIAM ON 3 5/8" DIAM BOLT CIRCLE.
2	GLASS DISK	2	3 1/4" DIAM x 0.045" THICK.	CUT FROM LANTERN SLIDE GLASS, CLEAN CAREFULLY BEFORE INSTALLING. CEMENT IN PLACE WITH PLIOBOND OR EQUIVALENT.
3	PAPER RING	1	2 7/8" OD x 5/8" ID BLACK VELOUR PAPER.	CEMENT UNTEXTURED SIDE CONCENTRICALLY TO GLASS DISK – USE PLIOBOND CEMENT OR EQUIVALENT.
4	BODY HALF	2	EPOXY RESIN CASTING POURED IN MOLD, ORNL DWG. 63-3904.	EPOXY MIX: CIBA ARALDITE 502 OR EQUIVALENT 125 g CIBA ARALDITE HARDNER 951 12.5 g DECOLORIZING CARBON 1 g SETTING TIME 24 hr IMPORTANT – BEFORE CASTING, COAT MOLD WITH JOHNSONS PASTE WAX OR EQUIVALENT HARD FINISH WAX. TO JOIN BODY HALVES – SANDPAPER ENDS AND COAT WITH EPOXY MIX – PRESS TOGETHER UNTIL SET. PAINT INTERNAL SURFACES WITH FLAT-BLACK LACQUER AND COAT WITH CAMPHOR SMOKE.
5	SAMPLE CONNECTION	2	1/4" SCH. 40 BRASS PIPE, 2" LONG.	PAINT AND COAT SAME AS BODY HALF.
6	PAPER DISK	1	1 3/4" OD BLACK VELOUR PAPER.	CEMENT SAME AS PART NO. 3.

Fig. 4. Disposable Light Chamber Components and Assembly Details.

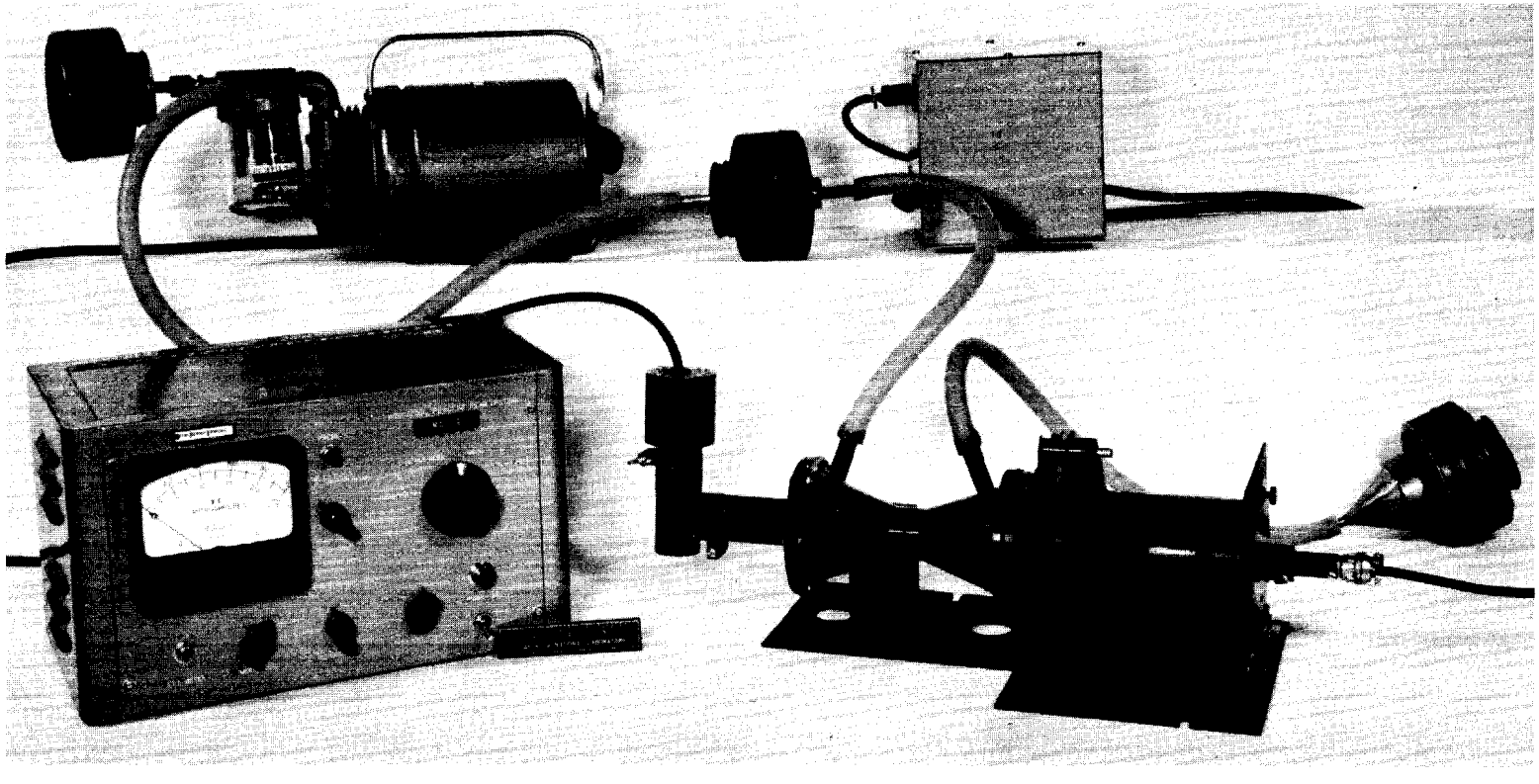

Fig. 5. NRL Percent Penetration Meter with Disposable Light Chamber.

Fig. 6. Disposal of Light Chamber, Canister Filter, and Sample Line Tubing after Filter Test.

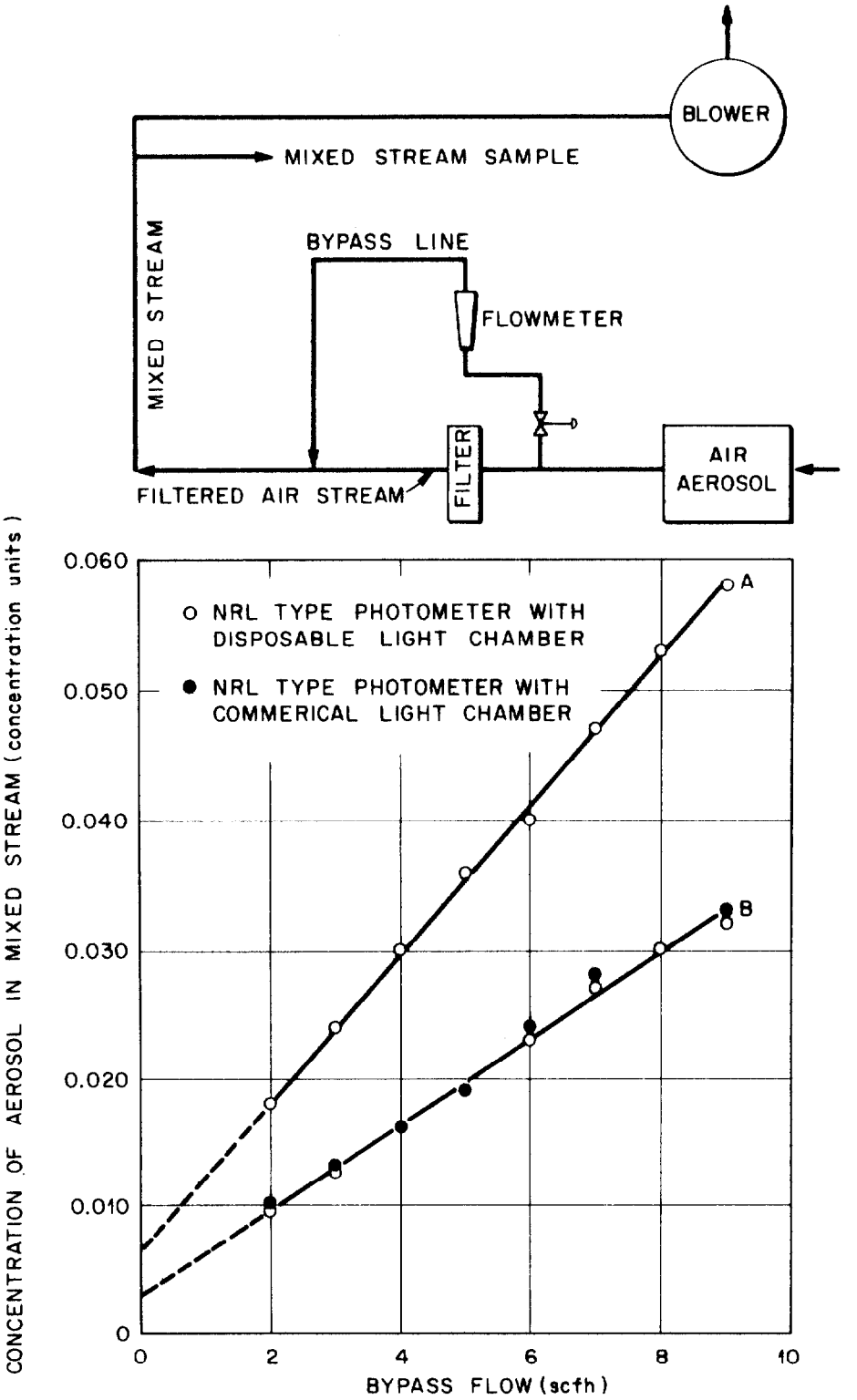

Fig. 7. Linearity of NRL Photometer with Disposable Light Chamber Over a Wide Range of Aerosol Concentrations.

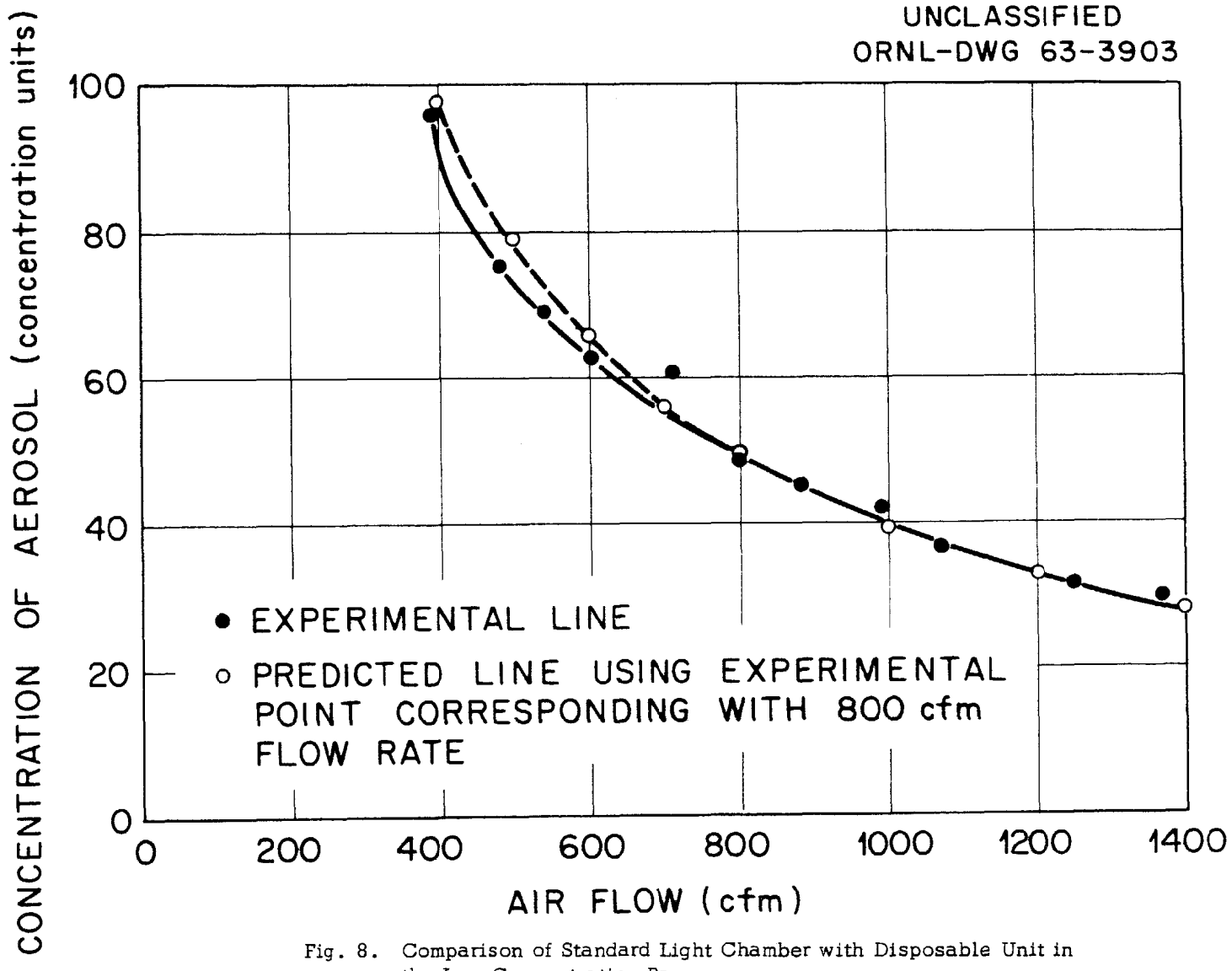

Fig. 8. Comparison of Standard Light Chamber with Disposable Unit in the Low Concentration Range.

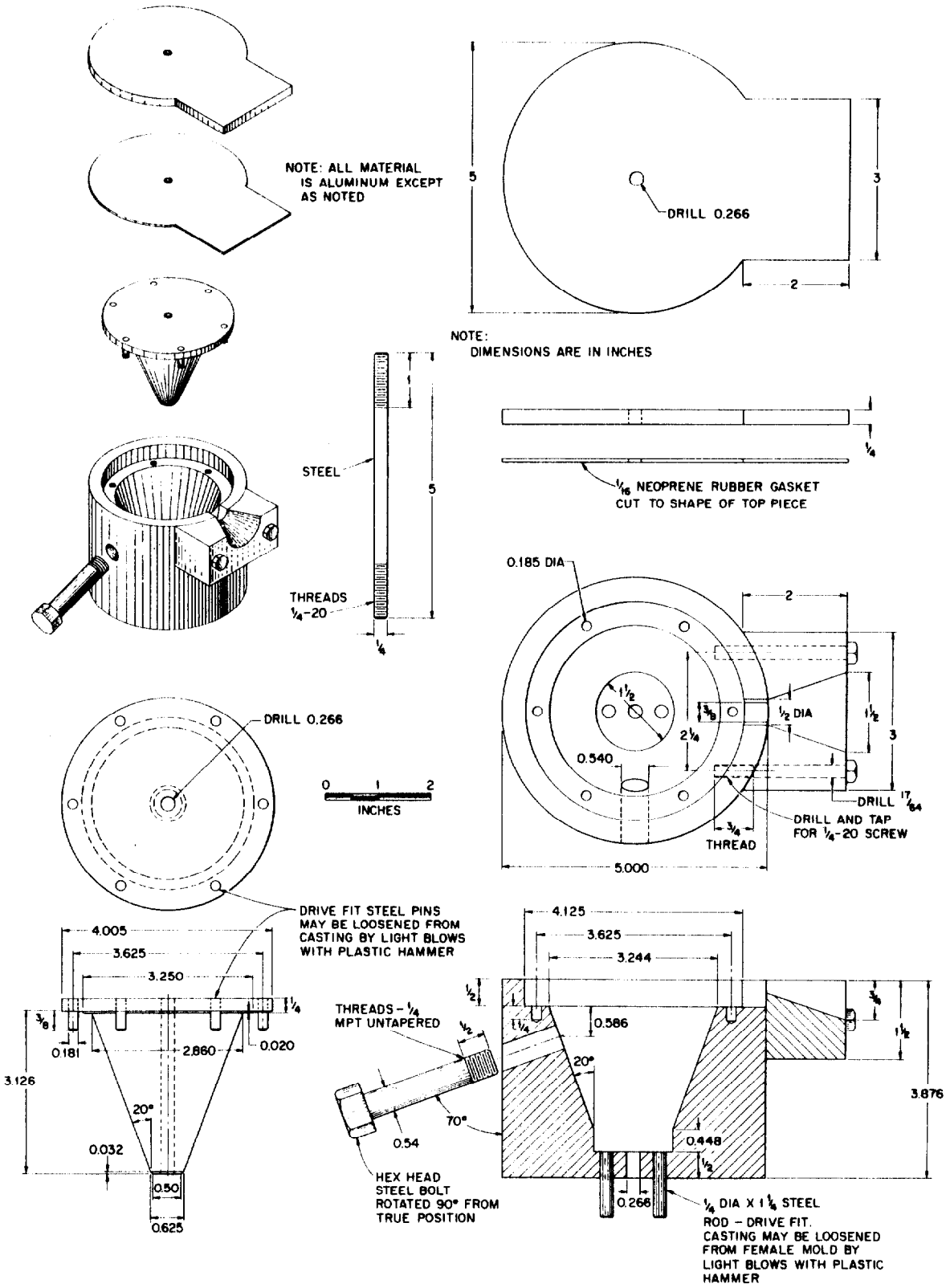

Fig. 9. Mold Details for Disposable Light Chamber Body-Half.

Finally, two NRL photometers, one equipped with a disposable light chamber, and the other with the commercial chamber were connected in series and adjusted to read full scale on the upstream sample. Curve B, Fig. 8, is a plot of the downstream concentration readings of the two instruments over the range of the bypass flow. The agreement between the two instruments is excellent. Extending curves A and B (Fig. 8) to zero bypass flow gives two different efficiencies for the same filter but since the difference is only a few thousandths of a percent it is not considered to be significant.

CONSTRUCTION DETAILS

Figure 9 provides details of the mold in which the disposable light chamber body castings are poured.

CONCLUSION

The cost of measuring the efficiency of highly contaminated particulate filter systems can be reduced by substituting a disposable light chamber for the commercial unit supplied with the Naval Research Laboratory Percent Penetration Meter. Tests indicate that the disposable light chamber is a suitable substitute from the standpoint of performance requirements. Additional tests are planned before the disposable chamber is released for routine in situ testing applications.

ELECTROSTATIC PRECIPITATOR FOR TREATMENT OF DIRECT-CYCLE, AIR-COOLED REACTOR EFFLUENT

R.B. O'BRIEN
Health Physics and Safety, Nuclear Materials and Propulsion Operation, Idaho Falls, Idaho - General Electric Company

At the sixth AEC Air Cleaning Conference held in Idaho Falls in July of 1959, several papers were presented pertaining to the specialized air cleaning problems encountered in the direct-cycle nuclear aircraft power plant development program. One of these, by C. L. Storrs and D. C. Foster (Proposed Side Loop Program at the IET), described a series of tests to be performed on a pilot plant electrostatic precipitator for removing fission products, both particulate and gaseous, from the high volume, high temperature air coolant discharged from a nuclear aircraft gas turbine engine. Since the aircraft nuclear propulsion program is no longer active, there is no specific requirement for such an effluent treatment system at present. Nevertheless, the results of these air cleaning experiments may be of interest for future application.

SYSTEM REQUIREMENTS

The homogeneous ceramic-UO_2 fuel elements developed for the Advanced Core Test (ACT) power plant released a very small percentage of the fission products produced continuously during power operation. The release mechanism was a combination of recoil of the fission fragments directly into the coolant air stream, diffusion through the fuel matrix and water vapor corrosion; with recoil evidently the predominant effect in the normal operating temperature range. Water vapor corrosion was effectively eliminated in the prototype fuel elements by application of a suitable coating material. The magnitude of this continuous fission product release was such that it would have presented essentially no health hazard from flying aircraft, but might have been of some concern for a prolonged stationary ground test.

For the ACT application, the effluent handling system would have been required to handle 175 pounds per second of air at a turbojet engine exhaust gas temperature of about 1000° F, at cruise power. At full power operation the air flow would have approximately doubled. An important design consideration was that the back pressure presented to the jet engine was required to be kept as low as possible; that is the pressure drop across the effluent handling system was required to be very small.

A survey was made of the various air cleaning processes available to determine which of them offered the greatest promise of success. Various forms of scrubbers, filters, separators and precipitators were studied with the result that an electrostatic precipitation process

was found to most nearly meet the operating requirements, particularly because of the low pressure drop associated with such systems.

PILOT PLANT TESTS

In 1959 a pilot plant electrostatic precipitator was installed at the Initial Engine Test Facility at the NRTS in order to study the performance of such a system and evaluate its worth. This installation is described in the aforementioned paper.

The HTRE-2 reactor, operating with a central insert composed of ACT-type ceramic fuel elements, supplied the fission product source for the tests.

Experience gained during the effluent monitoring program at IET had indicated that collection efficiencies of the radioactive gases on conventional filter papers were much higher when the turbojet engines were operated partially on chemical power than when operated on nuclear power alone. This effect was, of course, due to the adsorption of these gases on the carbon produced in the combustion process and subsequently removed by the sampling filters. This process (i.e. adsorption or chemical combination with a particulate or aerosol) was to be utilized to enable the electrostatic precipitator to attain removal efficiencies high enough for the proposed use.

Early testing of the precipitator was primarily for the purpose of evaluating a number of different air stream additives in order to permit optimization of cleaning efficiency and cost. The additives tested included carbon black, fly ash, converter fume, precipitator fines, $CuSO_4$, AgI, and $AgNO_3$. The precipitator was also tested with no additives, achieving removal efficiencies of only 25 per cent of the radio-iodines and 70 per cent of the gross fission products. The tests indicated that any additive to the airstream, upstream of the precipitator, would substantially increase its efficiency, but that the presence of silver compounds in the additive had a substantial advantage. The silver additives had two effects; they improved the operating characteristics of the precipitator, itself, as well as improving the efficiency for iodine removal. The best results of all were obtained using $AgNO_3$ injection plus combustion products from partial chemical operation of the jet engines or from a separate oil-fired burner in the exhaust duct upstream of the precipitator. Since the ACT was not designed to have a chemical combustion capability, however, it was not deemed worth the additional cost and complication to combine these two additives in a full-scale treatment plant.

The $AgNO_3$ additive was injected in two alternate locations; the first being in the side loop duct and the second in the tailcone of the turbojet; thus allowing a comparison of the effect of mixing time. Figure I shows the inferred effect of mixing time on iodine removal efficiency.

The concentration of $AgNO_3$ in the airstream was also varied by changing both the concentration and injection rate of the solution. Essentially no difference in efficiency as a function of $AgNO_3$ concentration was observed within the range investigated, as shown in Figure II.

The variation in iodine removal efficiency with face velocity (or total airflow through the precipitator) is shown in Figure III. Most of the testing was performed at a volume flow of 12,500 cfm (face velocity = 150 feet/min).

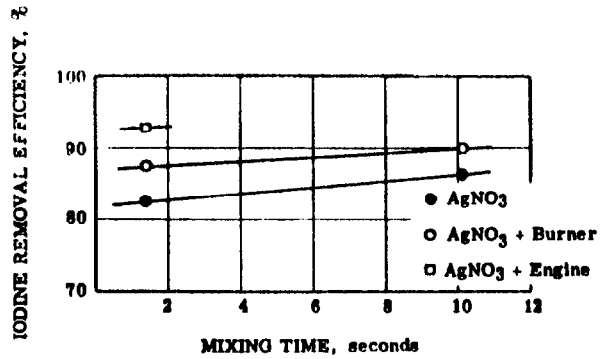

Fig. I - Precipitator Efficiency With Variable Mixing Time.

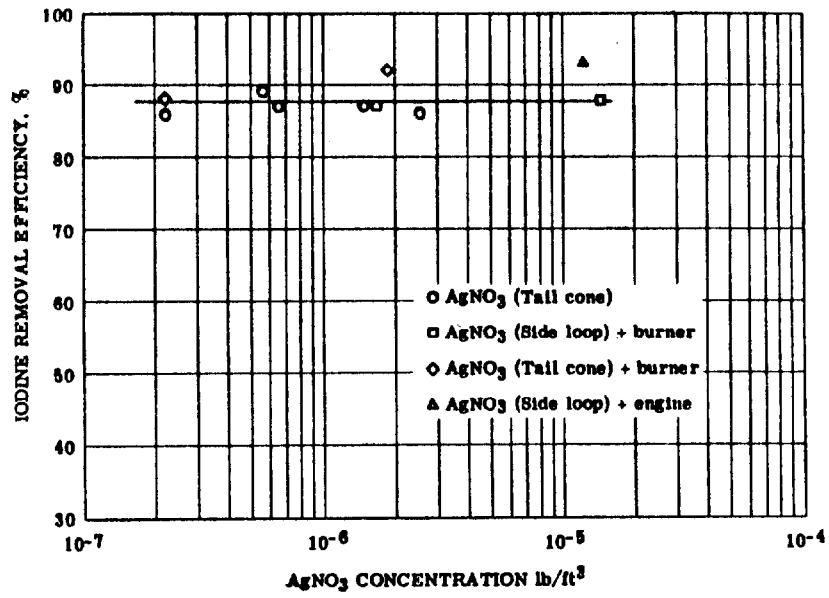

Fig. II - Precipitator Efficiency With Variable Additive Concentration.

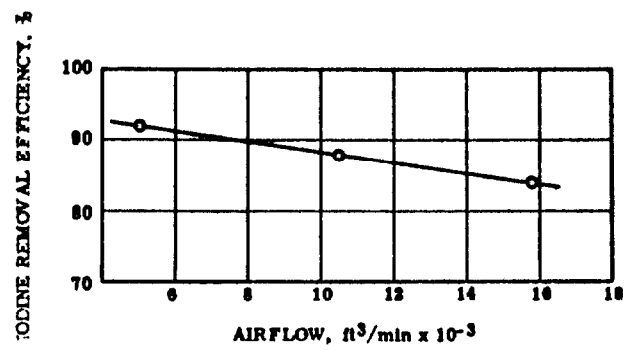

Fig. III - Precipitator Efficiency With Variable Gas Flow.

In addition to the above tests conducted with the relatively low fission product release rates associated with normal power plant operation, one test (the Limited Melting Experiment, or LIME) was conducted to simulate the higher release rates of a coolant loss accident. This was done by restricting the air flow through a ceramic fuel test sample, thus deliberately inducing a partial melt. During this test the chemical combustion system of the jet engine was in operation and $AgNO_3$ was injected into the airstream. The measured removal efficiency of the precipitator is shown in Table I.

TABLE I

Efficiency of Fission Product Removal by Electrostatic Precipitator in Per Cent

Isotope	I^{131}	I^{132}	I^{133}	I^{134}	I^{135}	Sr^{91}	Sr^{92}	Ba^{139}	Ba^{140}	Gross*
Efficiency	92	96	94	98	97	95	95	95	93	96

* Exclusive of the noble gases.

The results of the testing program led to the conclusion that an effluent cleaning system could be designed for the ACT that would provide a removal efficiency of at least 90 per cent of the iodine isotopes and their precursors. The thyroid seekers were, of course, the major concern. Removal of the bone seekers and gross activity exclusive of the rare gases would probably be greater than 90 per cent.

PRELIMINARY DESIGN OF EXHAUST SYSTEM

A design study of an effluent cleaning system for ground testing of the ACT was completed by the Ralph M. Parsons Company. Figure IV is an artist's conception of this system. The preliminary design described below was based upon this study but differed in the selection of silver nitrate as an additive rather than carbon black and in a reduction in the design airflow by a factor of approximately two. This reduction was based upon the premise that the desired efficiency of the system would be obtained under test conditions simulating cruise power, and that lower efficiencies would be permitted during tests of short duration at maximum power.

The design was therefore based upon an airflow of 500,000 cfm at 300° F, corresponding to testing at cruise power conditions. This condition was expected to apply for approximately 90 per cent of the endurance testing. Operation at maximum power would have involved approximately twice the airflow from the engine. During such operations, the additional airflow could be accommodated by operating the precipitator at a face velocity of 600 feet per minute instead of the usual 300 feet per minute. This would theoretically reduce the efficiency from 97 per cent to 90 per cent. It was considered possible to increase the efficiency of the precipitator by converting it to full wave rectification or by installing additional banks of plates had this become desirable.

As designed, the system consisted of a bellmouth to accept the exhaust from the engine as well as additional augmenting air, a section of ducting in which silver nitrate solution and cooling water would be introduced, a diffuser for pressure recovery, an electrostatic precipitator, and an exhaust stack. Auxiliary systems were included for handling the silver nitrate and cooling water, for cleaning the precipitator,

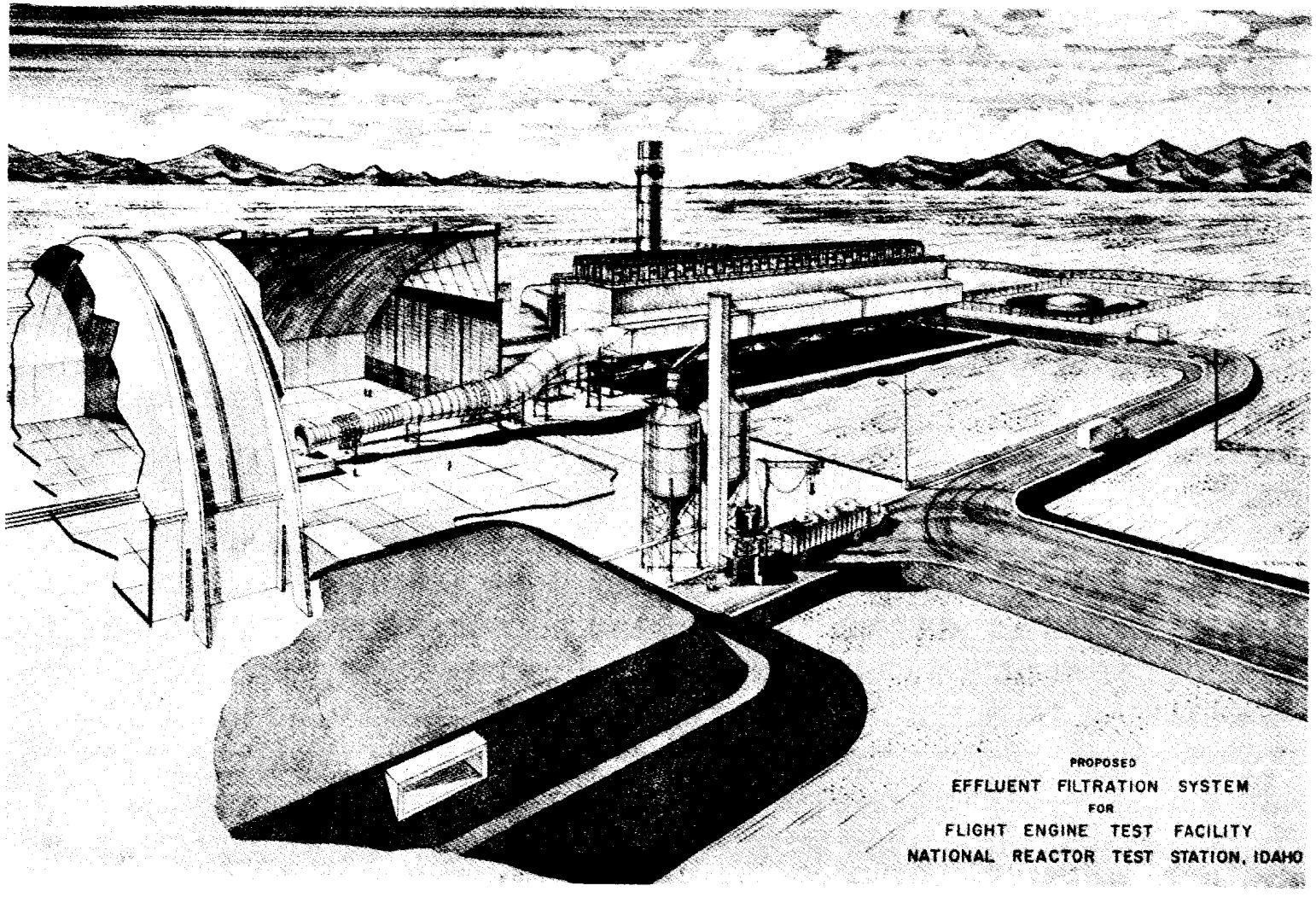

Fig. IV - Proposed Effluent Filtration System for Flight Engine Test Facility

and for contaminated waste disposal. Recovery of the silver nitrate was an economically attractive possibility.

The bellmouth and augmenter section was to provide free discharge conditions for the engine, permitting normal engine operation and accurate thrust measurements. The primary jet from the engine would induce a flow of secondary air into the augmenter throat by jet pump action. This secondary air would help to cool the effluent, thereby reducing the cooling water requirements. However, it was desirable to minimize the secondary air, consistent with satisfactory operation over the entire range of operating conditions, in order to keep the total volume flow low. The augmenter diameter was approximately 8 feet.

The bellmouth was followed by a straight section of duct 40 feet long. In this section were located spray rings for injecting silver nitrate dissolved in demineralized water, and for cooling water. The data from the tests at IET indicated that a suitable amount of additive could be obtained by injecting 60 gpm of .003 M silver nitrate for cruise test conditions, or 120 gpm for maximum power. This would provide about 5×10^8 molecules of silver nitrate for each fission product atom. Cooling water would be introduced at the rate of 150 gpm (300 gpm for maximum power) to reduce the volume of the effluent and consequently the size of the precipitator. A shock wave would form in this straight duct, enhancing the mixing of the additive with the primary exhaust stream.

Leaving the straight duct, the air would pass through a diffuser section and enter a main duct, approximately fourteen feet in diameter by seventy feet long, leading to the precipitator inlet plenum. This chamber would extend across the inlet face of the precipitator and serve to distribute the gas flow to each precipitator section. Adjustable vanes or louvers would be provided at the inlet face to accomplish this, and to control the amount of secondary air.

The electrostatic precipitator was of the wire and dry plate electrode type, specially designed to remove silver nitrate particles from the effluent efficiently. The precipitator consisted of three sections, each having four separate banks of plates in the direction of flow. The over-all structure size was approximately 60 feet high by 80 feet wide by 40 feet deep. Extra space was provided in the front of the precipitator shell to accommodate the future installation of two banks of plates, in case higher collection efficiencies were required. This extra space would also increase the mixing time of silver nitrate and fission products.

An effective plate length of 24 feet was required. Plates in each of the four banks were approximately 24 feet high by 6 feet long, and spaced 8 to 9 inches apart. The plates were designed to resist corrosive attack from the silver nitrate deposited on them in combination with the moisture in the gas stream during operation and the water during spray cleaning operations. High voltage, stainless steel wires, located midway between the plates at a spacing of 6 to 7 inches, were kept straight and taut by cast iron weights.

The power supplies were high voltage transformers with half-wave rectifiers. A minimum of 70 KV secondary peak voltage was required. Precipitator power consumption was estimated at 500 KVA. For increased system flexibility, power supplies having sufficient current capacity for conversion to full-wave rectification could be provided.

A water spray cleaning system was required to remove the collected silver nitrate from the plates after shutdown. Due to the great amount of surface area to be washed, a recirculating wash system was considered desirable.

The cleaned effluent leaving the precipitator entered multiple plenum sections, with ducts leading to a common exhaust stack. The stack was a carbon steel structure, approximately 18 feet in diameter by 150 feet high.

A processing and injection system was provided to prepare the additive in its proper form and concentration. Demineralized water was to be used to dissolve the silver nitrate. This system which would continuously prepare and control the injection into the effluent stream was to be located in a 600 square foot addition to the basement level of the existing Control and Equipment Building at the Flight Engine Test Facility (FET).

Processing capacity for a maximum injection rate of 120 gpm was required. Storage capacity for 2000 pounds of silver nitrate was required for 100 hours of continuous operation at a normal injection rate of 60 gpm allowing 30 per cent excess storage capacity.

A contaminated waste disposal system was provided to handle the radioactive wastes removed from the precipitator plates by spray washing. These wastes would have drained into hoppers beneath the shell from whence they would be pumped through underground piping to a waste disposal system. The disposal system process and equipment requirements were not determined pending a study of the economic justification of alternate methods. Waste concentration, silver recovery, and methods of ultimate disposal could have led to a rather complex chemical processing operation, with additional complications due to the contaminated nature of the waste.

Several auxiliary features were needed to complete the system. Utility services, such as cooling water, demineralized water, and a new sub-station for electrical power, were required. Suitable process instrumentation and control equipment were to be provided for the precipitator proper, as well as all auxiliary systems. Effluent sampling and radiation monitoring equipment was also required.

An estimate of the construction cost of such a system is given in Table II and of the operating cost in Table III.

In view of the relatively low removal efficiencies obtainable, it was decided ultimately, that the installation of the described system would not result in a gain in operating flexibility commensurate with its high initial and operating costs. A test control program based upon the prediction and postevaluation of effluent hazards and the selective use of favorable atmospheric dispersion conditions was believed to be nearly as effective and far less costly. Accordingly, no further work was undertaken.

TABLE II

CONSTRUCTION COST ESTIMATE

Improvements to Land	
Site preparation, including roads and fencing	$ 52,000
Buildings	
Underground injection equipment room - 600 square feet	30,000
Underground monitoring vault	20,000
Equipment (Installed)	
Augmenter, ducting and plenums	325,000
Precipitator	1,200,000
Exhaust Stack	125,000
Additive Processing and Injection System	150,000
Demineralized Water System	30,000
Cooling Water Spray System	75,000
Contaminated Waste Disposal System	150,000
Controls and Utilities	
Electrical Distribution	83,000
Water Supply	5,000
Process Controls and Instrumentation	50,000
Sampling and Monitoring Systems	50,000
Sub-Total	$ 2,345,000
Contingency @ 10%	235,000
Escalation @ 5%	117,000
Engineering, Design and Inspection @ 10%	235,000
ESTIMATED TOTAL PROJECT COST	$ 2,932,000

TABLE III

OPERATING COST
(based on 800 hours operation per year)

Item	Consumption	Unit Cost	Cost Per Hour
Silver Nitrate Additive	15 lbs/hr	$10 per lb.	$150
Electric Power	900 KW	1-1/2 ¢ per Kwh	13
Maintenance		1% of equipment cost	22
Operating Personnel			20
Total Cost Per Hour			$205
Estimated Annual Operating Cost			$164,000

PRELIMINARY DESIGN CONSIDERATIONS - EFFLUENT CLEANING SYSTEM FOR THE 630A GAS-COOLED MARITIME REACTOR

J. E. MAXWELL
Nuclear Materials and Propulsion Operations, General Electric Company, Idaho Falls, Idaho

INTRODUCTION

The General Electric Company under contract to the AEC is presently developing an air-cooled nuclear steam generator for maritime service. Although this a closed-cycle power plant there are several conditions that will or may be expected to arise which will require treatment of radioactively contaminated air prior to its release to the atmosphere. These conditions are:

1. Normal blower seal leakage - Seal pressurizing air normally leaks into the primary loop through the seals on the primary loop blower shafts. A corresponding amount of air must be bled to the atmosphere to maintain a constant pressure in the primary loop.

2. Bleed-down of the primary loop to perform routine maintenance.

3. Bleed-down of the primary loop or the containment vessel following a fuel melt.

To accomplish the required air treatment for these conditions it is planned that any air passing to the atmosphere from the primary cooling loop will flow through charcoal adsorption beds. For continuous releases such as the seal leakage the noble gases in the contaminated air will be delayed long enough in their passage by adsorption on the charcoal to decay to acceptable concentrations in the effluent. During intermittent releases such as depressurizing the primary loop the noble gases will be delayed long enough for the adsorption bed to be valved off when the required amount of air has been treated but prior to the elution of any noble gases. The halogens and volatile solids in the air will be permanently adsorbed by the charcoal, and due to the length of the adsorption beds their concentrations will be reduced to insignificant levels in the exhaust air. This phenomena of the adsorption by charcoal of noble gases, halogens, and volatile solids has been well covered in current literature[1, 2, & 4] and substantiated during previous fuel element and reactor testing in Idaho.

TYPICAL ADSORPTION BED DESIGN

The design layout of a typical adsorption bed is shown in Figure 1. This particular bed has a diameter of 30 inches and a length of 12 feet which gives it an active volume of 58.9 ft^3 and a total weight including the shielding of 15 tons. As may be seen, the adsorption bed is comprised basically of four main components - a steel clad lead shield, a 400 psi carbon steel pressure vessel, 1770 pounds of activated charcoal, and an aluminum heat exchanger. The shield is tapered in thickness from 7" at the air inlet end of the adsorption bed where the halogens and the volatile solids will concentrate to 2" for the final 9 feet of bed. The pressure vessel will be designed with sufficient corrosion allowance to allow for acid decontamination so that the vessel may be fabricated from standard 32" OD carbon steel pipe and flanges.

The design of the aluminum heat exchanger is important because one of the major problems occurring when large amounts of fission products are adsorbed by charcoal is the removal of the decay heat. Although the quantities of heat to be removed may not be too large, the poor thermal conductivity of the carbon makes it fairly difficult to remove the heat while keeping the hot spots in the carbon within acceptable limits. This internally contained aluminum heat exchanger is one feature of these particular adsorption beds that is substantially different from any previously reported adsorption bed design and is therefore worthy of further discussion.

A detailed drawing of a section of the water-cooled heat exchanger is shown in Figure 2. Notice that for the top 11.5 feet of the filter each water tube has six fins located in an uniform rectangular pattern to take full advantage of the good thermal conductivity of the aluminum fins. Due to the uniform length of the heat conduction paths, the maximum hot spots in the last 11.5 feet of charcoal are only about 10° F above the cooling water temperature for the largest conceivable decay heat load.

The bottom six inches of the full length cooling fins have additional fins to transfer to the cooling water the heat generated by the halogens and volatile solids which tend to concentrate in that area. The maximum hot spot in this lower area is about 50° F above the water temperature. This temperature will have an insignificant effect on the adsorption of the halogens and volatile solids.

There are twelve 1/4" OD U-tubes for circulating the cooling water within the heat exchanger. At a total flow of 4.15 gpm there will be a pressure drop of 1.36 psi and a water temperature rise of 10° F maximum over the length of a U-tube.

The main advantage of this heat exchanger design over others investigated is that a minimum of pressure vessel volume is taken up by aluminum fins and water tubes. This results in maximum utilization of the pressure vessel volume for containing charcoal so that the weight of the shielded unit is minimized.

Although a first glance at the drawing might give the impression that the heat exchanger will be hard to fabricate, it will not. Two special aluminum extrusions are required. The rest of the fin parts may be sheared from either the special extrusions or 16 gauge plate. Except for the water headers and the additional fins in the lower six inches of the bed, all welding may be accomplished with automatic seam welding equipment.

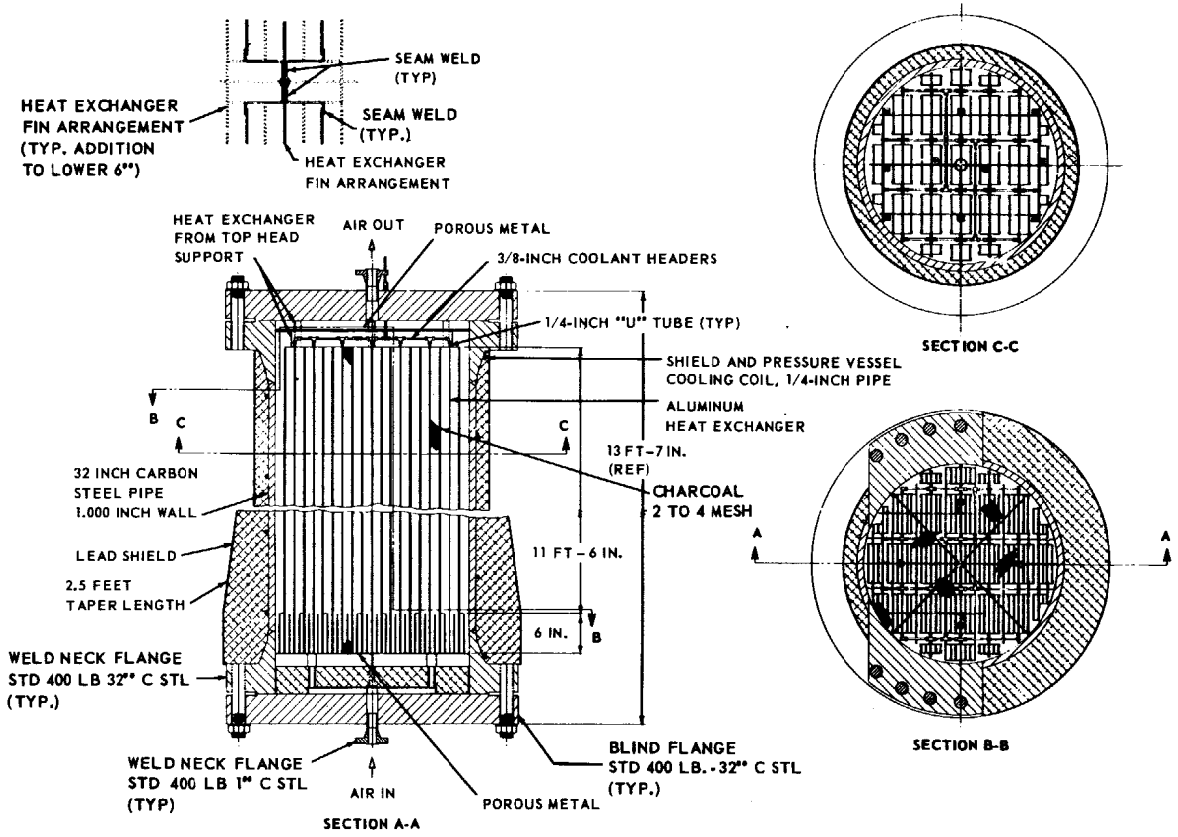

Fig. 1 – Waste-air filter

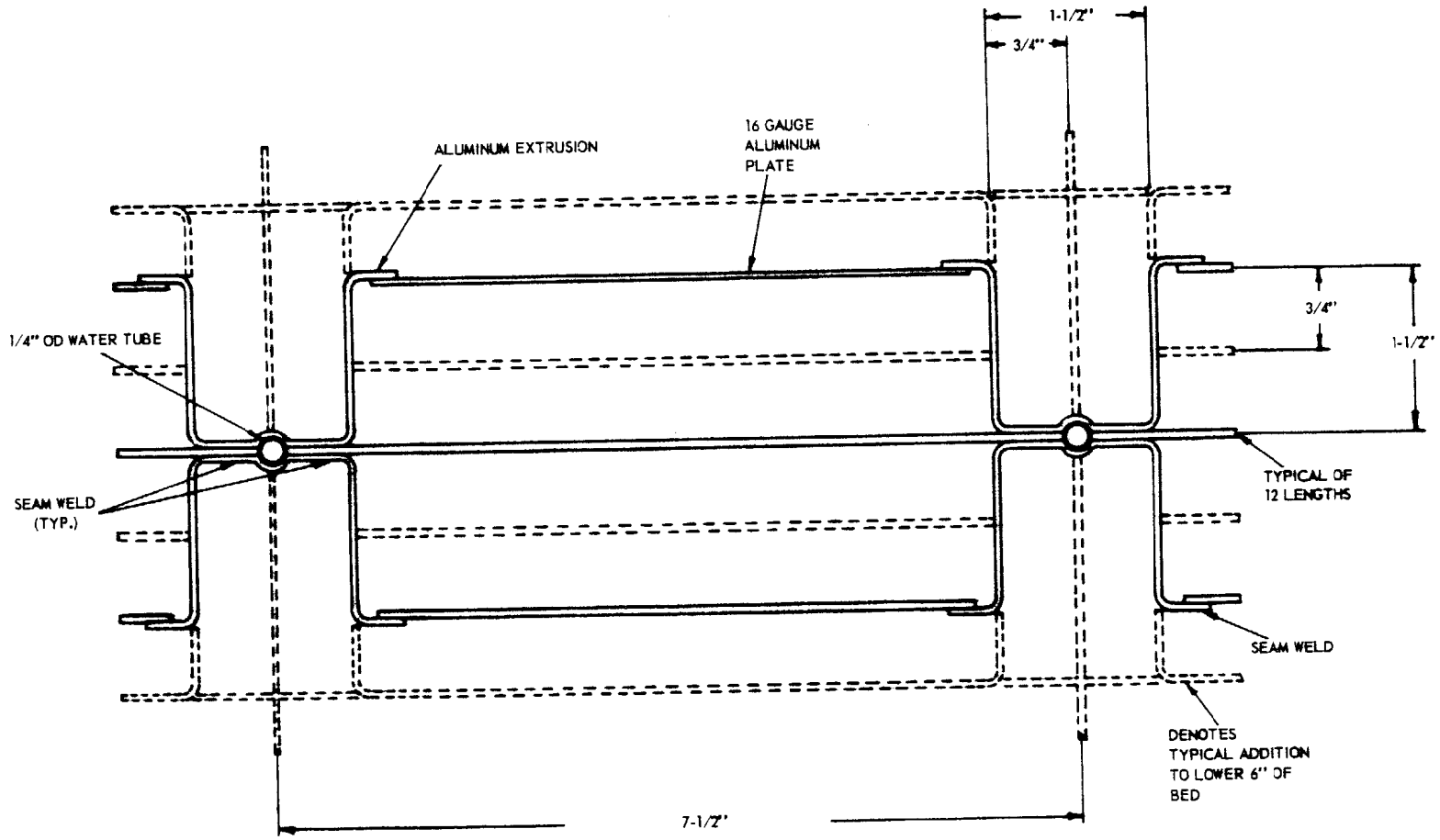

Fig. 2 – Typical detail of heat exchanger fins

OPERATION OF THE AIR CLEANING SYSTEM

Two adsorption beds of the type described will be utilized in the air cleaning system shown in Figure 3. During normal operation the bleed air which compensates for the normal inward seal leakage around the primary loop blower drive shafts will be bled to the air cleaning system at a rate of about 0.2 scfm. It will first pass through the heat exchanger and then through the 12-inch diameter, 12-foot long seal leakage adsorption bed. Any noble gases present will be delayed for the times shown in Figure 4. During this delay time they will also decay as shown on Figure 4 so that the release of noble gases to the atmosphere will be well below the maximum permissible concentration, even for 100% release of the noble gases from the fuel.

For normal depressurization of the primary loop the air will be bled through the heat exchanger and the depressurizing adsorption bed. The delay of the noble gases will be sufficient to allow complete depressurization of the primary loop before elution of the noble gases from the adsorption bed occurs. The adsorption bed may then be valved off so that all of the noble gases will be contained for later disposal. Complete depressurization may be accomplished in about 30 minutes with a face velocity of 16 ft/min and total pressure drop of 7.5 psi for the adsorption bed.

If a reactor melt should ever occur, the seal leakage air will be bled through the seal leakage adsorption bed for about 30 hours following the melt at which time the primary loop may be depressurized through the depressurizing adsorption bed without exceeding allowable radiation levels at the surface of the adsorption bed shield. Since the delay time for the seal leakage adsorption bed is greater than 30 hours, and the depressurizing adsorption bed will be valved off at the completion of the depressurization, all noble gases from the melt will be contained within the primary loop and the adsorption beds.

There are several factors that affect the required size for the adsorption beds. One of these is the total volume of air to be treated. The volume of air to be treated will be minimized by controlling the flow of air through the adsorption beds at the outlet of the beds so that the beds will always operate at approximately primary loop pressure.

Although temperature has an effect on the delay time for noble gases, the adsorption beds will probably not be cooled to low temperatures because of the complicating factors involved in providing an adequate refrigeration system. The beds discussed were sized on the assumption of a cooling water temperature of 85° F. This would be attainable in all but the warmest tropical seas. For operation in warmer seas the possibility of making an emergency connection to the existing shipboard refrigeration systems will be investigated. Since this cooling load would only occur during planned depressurization, it should be within the capacity of most refrigeration systems for the ship's stores.

CONCLUSIONS

As a result of the design study, it is evident that the proposed air cleaning system utilizing charcoal adsorption beds may be easily built and will be reliable in operation. By utilizing the proposed air cleaning system it will be possible to:

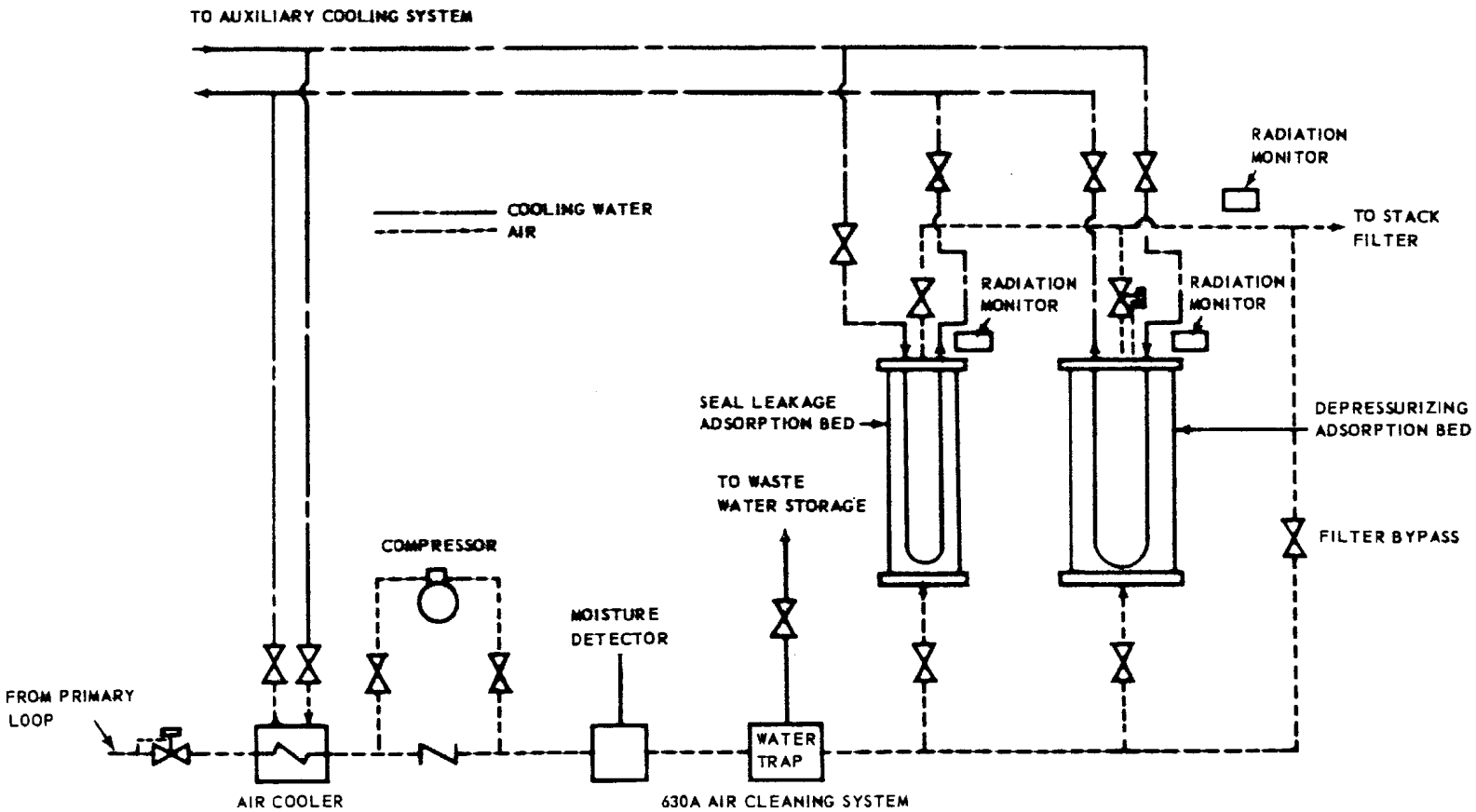

Fig. 3 – Waste-air cleaning system

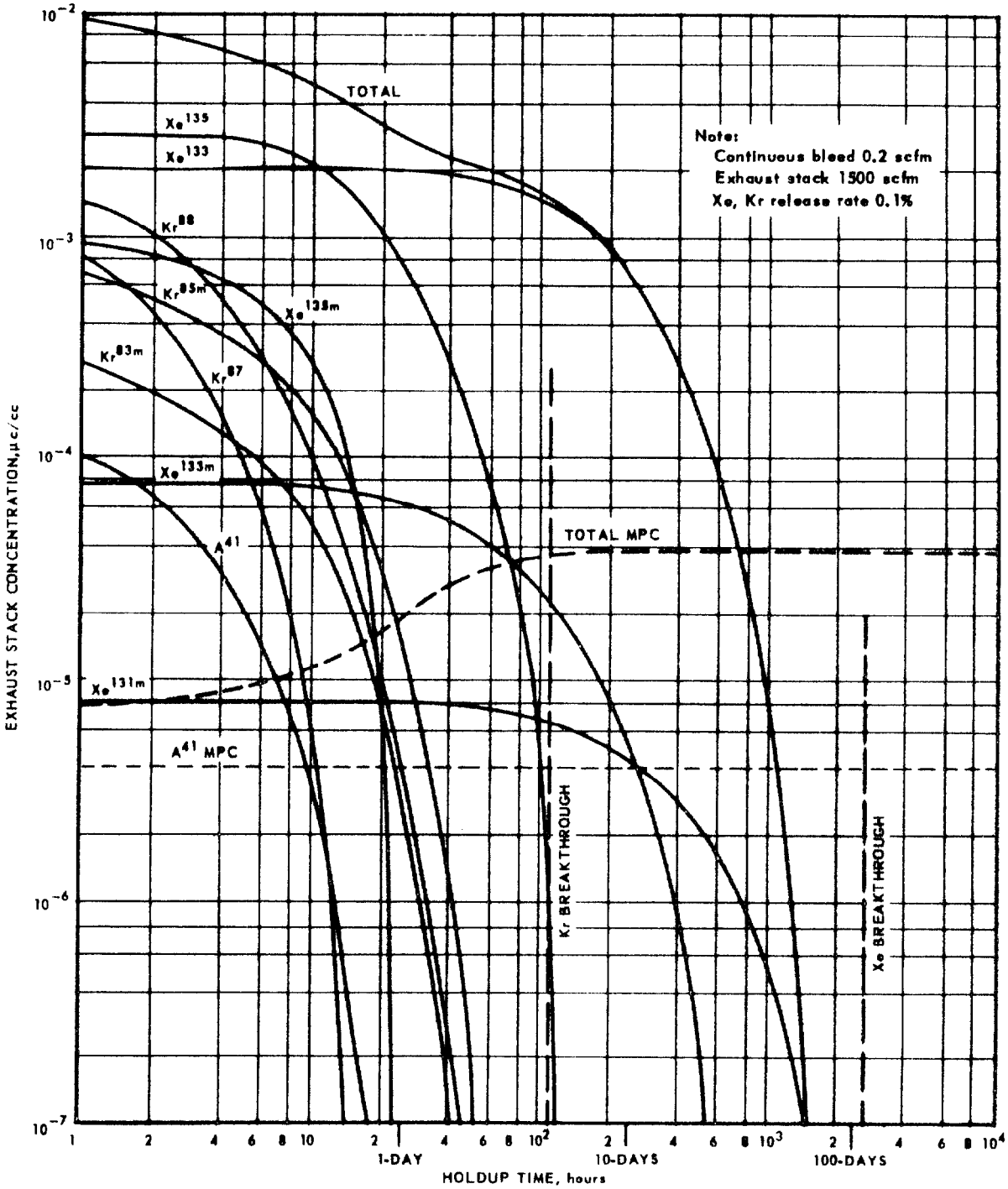

Fig. 4—Noble gas effluent activity versus holdup time

1. Keep the radioactive material in all air released to the atmosphere during normal operation well below maximum permissible concentrations.

2. Depressurize the primary loop at any desired time to perform routine maintenance such as changing a blower.

3. Depressurize the primary loop following a fuel melt of any magnitude without releasing significant amounts of radioactive material to the atmosphere.

REFERENCES

1. R. D. Ackley, R. E. Adams, and W. E. Browning, Jr., "The Disposal of Radioactive Fission Gases by Adsorption," Sixth AEC Air Cleaning Conference, TID-7593, July 7-9, 1959.

2. R. E. Adams and W. E. Browning, Jr., "Removal of Radioiodine from Air Streams by Activated Charcoal," ORNL-2872, May 10, 1960.

3. R. E. Adams and W. E. Browning, Jr., "Estimate of the Probability and Consequences of Ignition of the HRT Charcoal Beds," ORNL-CF-58-6-6, June 3, 1958.

4. E. E. Anderson, G. L. Wessman, and L. R. Zumwalt, "Fission Product Trapping - Sorption of Cessium by Activated Charcoal," Nuclear Science and Engineering, 12, Pp. 106-110, 1962.

the penetration of some types of filters through clogging whilst a further source of error may be encountered as the esparto paper is not an efficient collector of the smaller particles (2).

The sodium flame photo-electric penetrometer (3) based on the visual instrument developed by Walton (4) has been used for a number of years, both in this laboratory and in the factory, for testing small air filters at flow rates of $\frac{1}{2}$ to 3 ft^3/min, and it was decided to modify the apparatus so that it would be capable of testing filters of 0.001 per cent equivalent methylene blue penetration at flow rates of up to 1000 ft^3/min. In the course of these modifications a considerable simplification of the electronic system has been achieved and factory testing should be possible with, at most, semi-skilled labour; the test is practically instantaneous and the rate at which filters can be tested is likely to be controlled by the speed at which they can be connected to the test rig.

GENERAL DESCRIPTION

The test cloud is of common salt formed by evaporation of a spray from an aqueous solution. The particles are generally cubical and the size distribution of the longer diagonals is mainly between 0.02 and 1.0μ with a mass median size of 0.6μ. An electron micrograph of a sample of the cloud, gold-palladium shadowed at 45°, is shown in Fig. 1. The concentration of salt and the spraying pressure were chosen so that the size range of the particles would be very close to that employed in the methylene blue test and there would be reasonable agreement between penetrations measured by either method.

The apparatus is shown diagrammatically in Fig. 2. A continuous stream of droplets from a 2 per cent salt solution is produced by the atomizers A, which are operated at a pressure of 100 lb/in^2. Most of the larger droplets are removed by the baffles around the atomizers and the remainder of the cloud is blown down the trunking B, towards the filter C, by the main flow. Close to the entrance is a small detachable sump which collects any surplus liquid. The dimensions of the trunking should preferably be such that the air velocity is less than 30 ft/sec and the time of passage to the filter under test is at least 2 sec. A centrally situated circular plate of diameter $D/\sqrt{2}$, where D is the trunking diameter, is fixed at some $\frac{2}{3}$ of the distance from spray box to filter. The main air flow was not dried during the development of the apparatus but under normal conditions all the water evaporates from the droplets before they reach the filter leaving a test cloud of small particles of salt. After passing through the filter under test the air flows down the trunking V and through the orifice plate, O, which is connected to a manometer to measure the main air flow and which also serves to mix the effluent particles. Just inside from the open end of the trunking is an elbow bend tube E which is connected through a brass cock and rubber hosing to the horizontal tube H when the cock is in the 'Test' position. The pressure of the air emerging from the trunking is generally sufficient to blow air through H, the flow being metered to between 1 and 2 ft^3/min by an inclined tube flowmeter and controlled by a screw clip on the rubber hosing. In case, however, with low main air flows the flow through H is smaller than 1 ft^3/min a flap valve is sited at the end of the trunking, V, so that the flow may be increased to the requisite value.

Whilst most of the air flowing down H emerges from the open end and mixes with room air some is drawn up from the flame tube T (in which is housed the hydrogen burner Q) by convection and it has been found that the convective flow is almost independent of the flow in the horizontal tube, the flame burning quite freely. When the cock is in the 'Standby' position the tube H is connected to a supply of filtered air from a small blower G so that the burner does not become contaminated with dirty air from the test room when tests are not in progress.

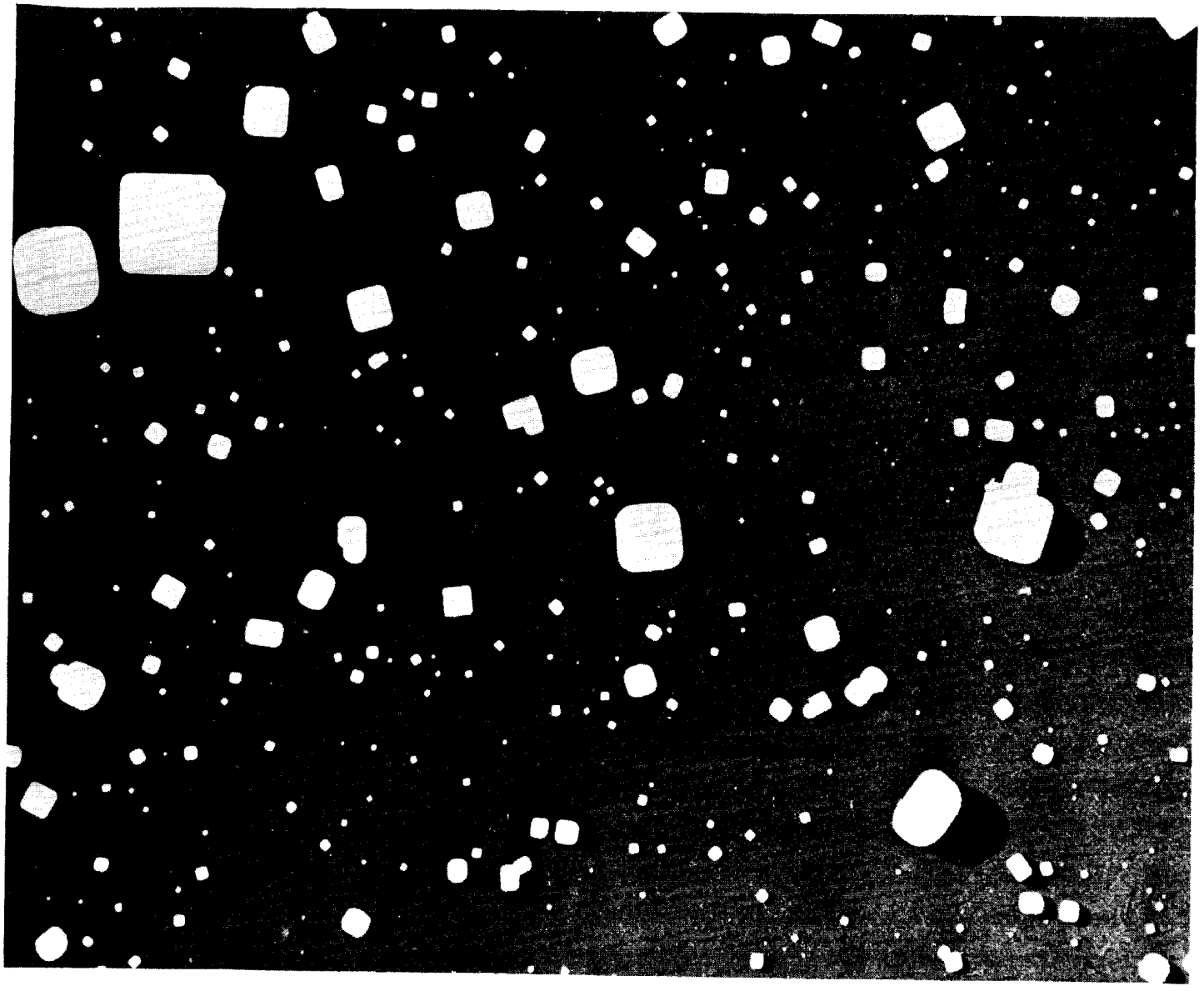

Fig.1. Electronmicrograph of sample of test cloud

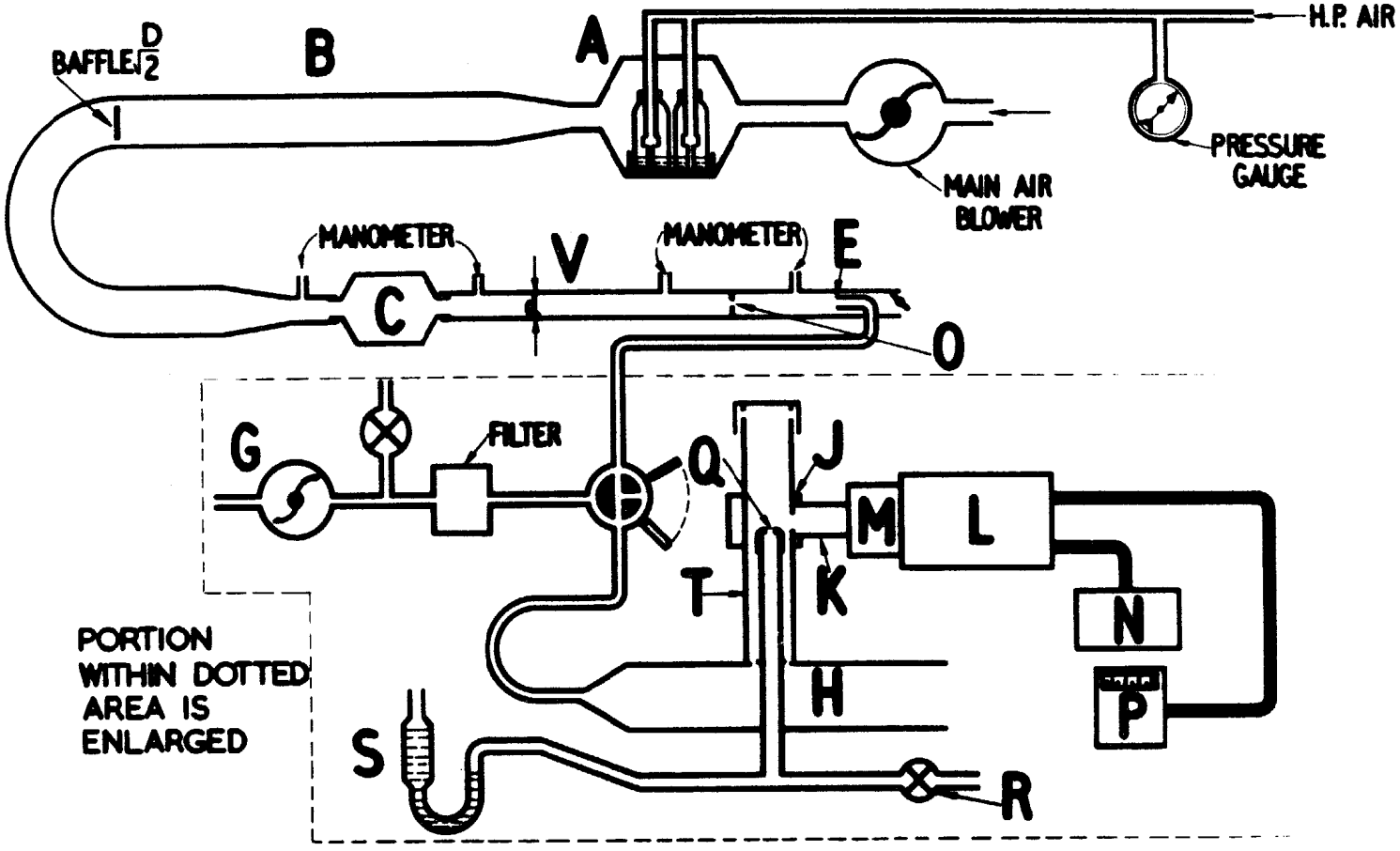

Fig.2. Schematic diagram of apparatus

Inside the flame tube is a closely fitting glass chimney which is silvered on the outside and has a clear circular patch opposite to the flame and, at the same height, there is a metal head, J, which bears the horizontal tube, K, and the photo-multiplier housing, L; the height of the head is adjustable so that the flame, the clear circular patch on the glass chimney and the photo-multiplier cathode are in line. The ceramic burner (Bray Ceto No. 310 $10\frac{1}{2}$ l./h) produces a flat fan-shaped flame and is positioned so that the long side faces the photo-multiplier. Just in front of the housing, L, is a box, M, which contains an interference light filter, permanently installed, to isolate the sodium lines in the yellow, and space is also left for neutral density filters to reduce the light intensity to a convenient level. The photo-multiplier E.H.T. is provided by a half-wave rectifier with corona discharge stabilizer, N, and the output is led to the Pye 'Scalamp' galvanometer, P.

The pressure of hydrogen at the burner is regulated to 1.6 in. water gauge, indicated by the manometer, S. The gas is supplied from a cylinder fitted with reducing valve and consumption is approximately $\frac{1}{3}$ ft^3/h.

ATOMIZER

The necessary characteristics of any nozzle are that:

(a) The spray distribution of sizes remains constant for any given pressure.

(b) The orifices are large enough to ensure that blockages do not occur when reasonable precautions are taken to keep the liquid and compressed air clean.

(c) It is easily reproducible, and the throughput of droplets in the required size range is as large as possible for a given volume of compressed air.

Experience has shown that the Collison atomizer (5), or some modification of it, meets these conditions probably as effectively as any other design and, after some trials of other types, a modified Collison nozzle was adopted.

In order to increase the throughput of spray the compressed air holes of the standard Collison nozzle were enlarged to 0.03 in. (standard 0.011 in.) diameter and the central air feed hole was also enlarged to prevent the spray from cutting out at about 50 lb/in^2. The final design, made in stainless steel to avoid corrosion, is shown in Fig. 3. This atomizer is operated at 100 lb/in^2, the flow being metered by a manometer-orifice type flowmeter, and the larger droplets are removed by baffles $1\frac{1}{4}$ in. from the orifices. The baffles are constructed from polythene bottles (Fig. 4) and are held in position by drilling the screw caps and sliding them over the atomizer air feed tube, a tight fit being obtained by packing the caps with rubber tubing before screwing them on to the bottles. The liquid feed tube of the atomizer projects through the bottom of the bottle into the salt solution and drain holes are made in the bottom so that excess liquid will run back into the perspex tray containing the solution. The spray escapes to the main air flow through the three slots, each 5 in. long and 1 in. wide, the long sides of which are turned inwards for 3/16 in., cut in the sides of the bottles. The baffles must be positioned carefully opposite to the orifices as shown in the figure. An atomizer with three spray orifices needs about $3\frac{1}{3}$ ft^3/min of atmospheric air, compressed to 100 lb/in^2, and for testing filters to 0.001 per cent methylene blue penetration at 1000 ft^3/min at least four such atomizers are required. For smaller, or lower efficiency, filters it is often possible to dispense with one or more atomizers and in some cases to use only a single spray orifice instead of three.

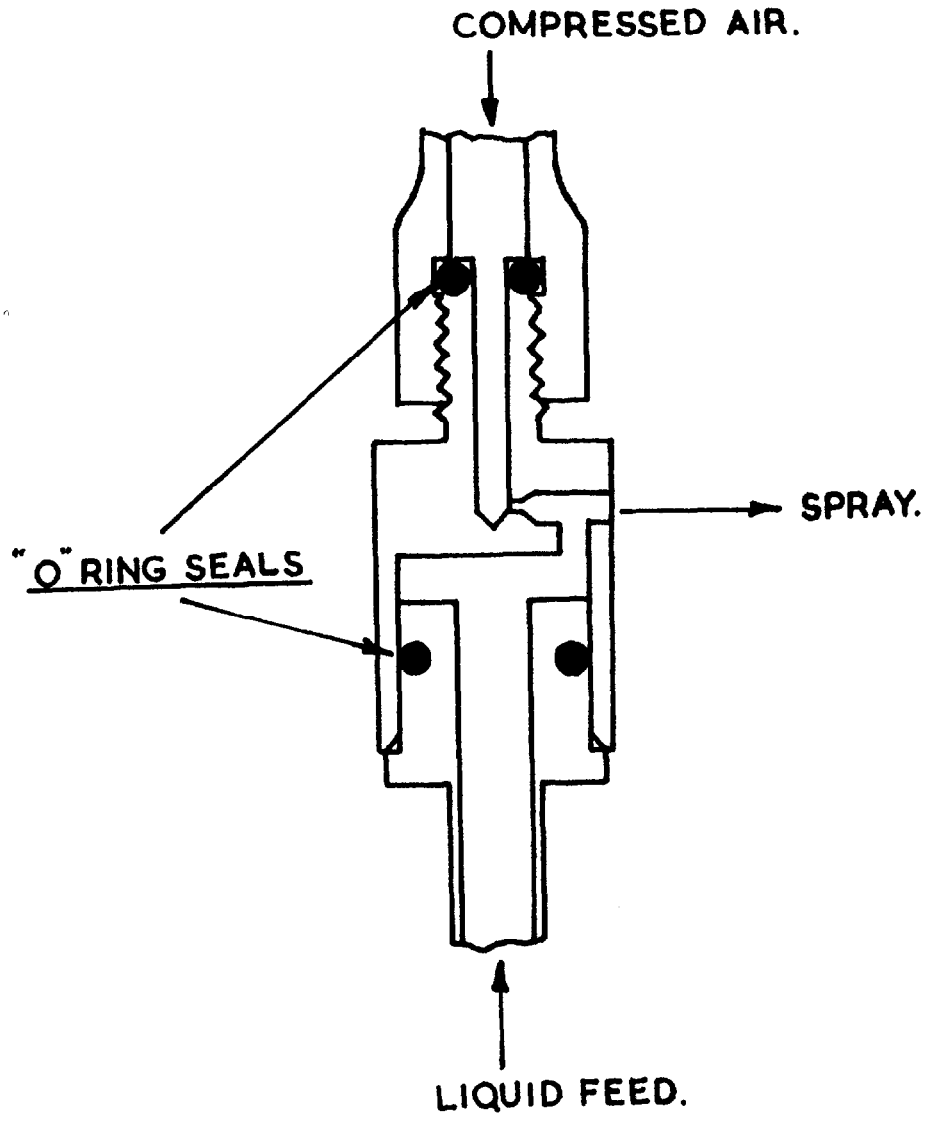

Fig.3. Nozzle

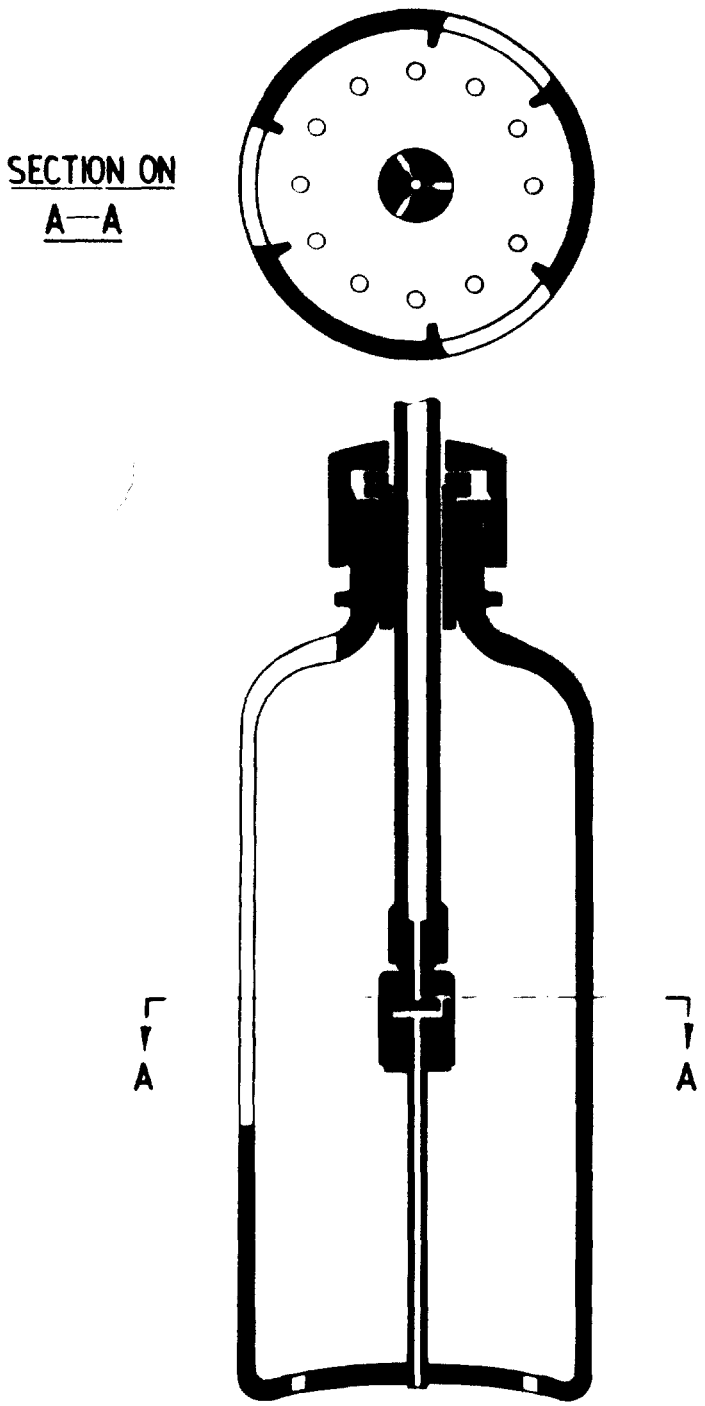

Fig.4. Polythene bottle showing nozzle and baffle system

SPRAY BOX

This consists of a 22 inch cube wooden or non-corrodible box with 12 inch diameter vents at each end, one of which is connected to the blower and the other to the main trunking (an 18 inch cube is sufficient for 2 atomizers and flows of up to 500 ft^3/min). The top is of perspex, a half inch thick, held in position by spring clips, and a sponge rubber gasket is included to make it air-tight. The atomizer feed tubes pass through this lid and are clamped in position by a circular brass boss, containing a rubber sleeve, which is tightened by hand with a knurled nut making an air-tight seal. In order to keep the salt solution free from dust and lint it is contained in a tray with a loosely fitting perspex cover in which holes are drilled, at the appropriate places, to accommodate the polythene bottles which serve as spray baffles. It is also desirable that a filter be connected to the inlet side of the blower so that the main air flow through the spray box is kept reasonable clean.

TRUNKING

Although metal ducting was employed during the development stages it was considered that the trunking in front of the filter should be salt-resistant and the final design incorporates poly-vinylchloride ducting.

The conduit, V, on the effluent side is of metal, 6 inches in diameter for flows of up to 500 ft^3/min whilst for flows of 1000 ft^3/min an 8 inch duct is recommended. The conduit carries the orifice plate which, besides its primary function of providing a pressure drop for metering the air flow, ensures good mixing of the effluent cloud. Particulate laden air from small leaks in the filter material or sealing follows flow lines for considerable distances, and thorough mixing is necessary to measure the average penetration. It has been found (6) that the orifice plate at a distance of greater than 3d (where 'd' is the diameter of the conduit V) from the filter followed by a sampling point at least a further 8d down the ducting and a final straight length of 5d provide satisfactory mixing and sampling. The apparatus is under discussion as a British Standard test and for this purpose effluent ducting will be specified to conform to British Standard practice. Isokinetic sampling is not essential, velocities of between $x\frac{1}{4}$ and x4 duct velocity being satisfactory.

DRYING SYSTEM

To obtain accurate results it is essential that the particulate at the filter face consists of dry salt particles and this is almost certainly the case for relative humidities in the trunking of 60 per cent and below. It has, however, been found, in small scale laboratory experiments, that there is a decrease in measured penetration at relative humidities of above 60 per cent because of inadequate drying of particles. At a relative humidity of 70 per cent in the trunking, when testing a cotton-asbestos filter of penetration about 0.001 per cent at 200 ft^3/min, the error is likely to be -0.0004 per cent. An error of such magnitude, whilst it is an undesirable feature, is not inordinately large for this type of work; it will, however, be different for different filter materials and flow rates, and will increase rapidly with increasing relative humidity, and it is therefore necessary to incorporate a drying system into the equipment if it is to be used for accurate and regular testing. Suitable drying equipment may be bought although it is comparatively expensive. A considerable reduction in relative humidity can be achieved more simply by heating the main air-flow and this method may be sufficient when it is not necessary to have the apparatus always available for use. Whether or not a drying system is employed it is recommended that apparatus be installed to measure relative humidity in front of the filter. After assessment of relative humidity the device should be removed to prevent long term contamination by salt from affecting its accuracy.

PHOTO-MULTIPLIER, E.H.T. UNIT AND GALVANOMETER

The photo-multiplier must be of high sensitivity and, for ease of use, should show only a small dark current, and a comparatively recently developed photo-multiplier marketed by Messrs. E.M.I. was found to be suitable. This photo-multiplier, an end-window E.M.I. Type 9524 A, has proved to be very stable and tubes of approximately 200 amps/lumen sensitivity at 1000 V with dark currents of less than 0.003μ A have been specified for the apparatus. Special attention must be paid to the housing in order to prevent ingress of stray light.

The E.H.T. power unit circuit for the photo-multiplier is shown in Fig. 5. It consists of a half-wave rectifier with condenser input and resistance-capacity smoothing followed by a corona discharge stabilizer. The stabilizer, a GEC SC1/1000, is stated by the manufacturers to provide a negative output voltage stable to $\pm$ 1 per cent over several thousand hours of use. Under normal operating conditions the total current loading consists of 80μ A through the dynode chain and less than 2μ A through the photo-multiplier. The signal is measured on a Pye 'Scalamp' galvanometer (Type 7904/S) which has a time constant of 2 seconds. In order to damp the galvanometer and to reduce the effects of occasional flicks when dust or fibre are blown through the flame a 25 KΩ resistor and 250μ f electrolytic condenser are connected across the galvanometer terminals.

The deflexion of the galvanometer when the photo-multiplier views the clean flame depends upon the attenuation in the interference filter and any neutral density filter in the light filter box, on the sensitivity of the photo-multiplier and on the E.H.T. value. In order to simplify the power unit the voltage is fixed so that the deflexion is controlled by the interference filter and the photo-multiplier sensitivity, both of which vary from article to article. The voltage recommended is therefore one which is high enough to give a good clean flame deflexion even with a high attenuation interference filter and a comparatively low sensitivity photo-multiplier; if a high sensitivity photo-multiplier is used it may therefore be necessary to insert a neutral density light filter permanently in the box to reduce the galvanometer readings to a reasonable level. To test particulate filters of penetration in the 0.001 per cent region it is recommended that a clean flame background of 5 to 7 cm should be used when the galvanometer is switched to range 1 (the most sensitive range). The galvanometer should always be read on range 1 and deflexions reduced to scale by insertion of neutral density filters in order to preserve linearity of response. The galvanometer is sensitive to vibration and should be clamped to a wall bracket or well-cushioned to withstand shocks.

FLAME TUBE ASSEMBLY

A diagram of the flame tube assembly is shown in Fig. 6. The dimensions of the horizontal tube, H, and the vertical chimney, T, are such that the flame burns freely for flows of about $\frac{1}{2}$ to 3 ft^3/min along the horizontal tube.

CALIBRATION

1. Clean flame background.

The mains supply to the power unit is switched on with the photo-multiplier masked and five minutes allowed for the dark current to stabilize. A good quality particulate filter is placed in circuit and the impeller fan switched on with the cock in the 'Test' position and the air flow adjusted to the correct rating; the ancillary blower is also switched on. When the dark current is steady it is backed off on the galvanometer by adjusting the zero, the meter being switched to range 1. The hydrogen flame is then lit (the burner having

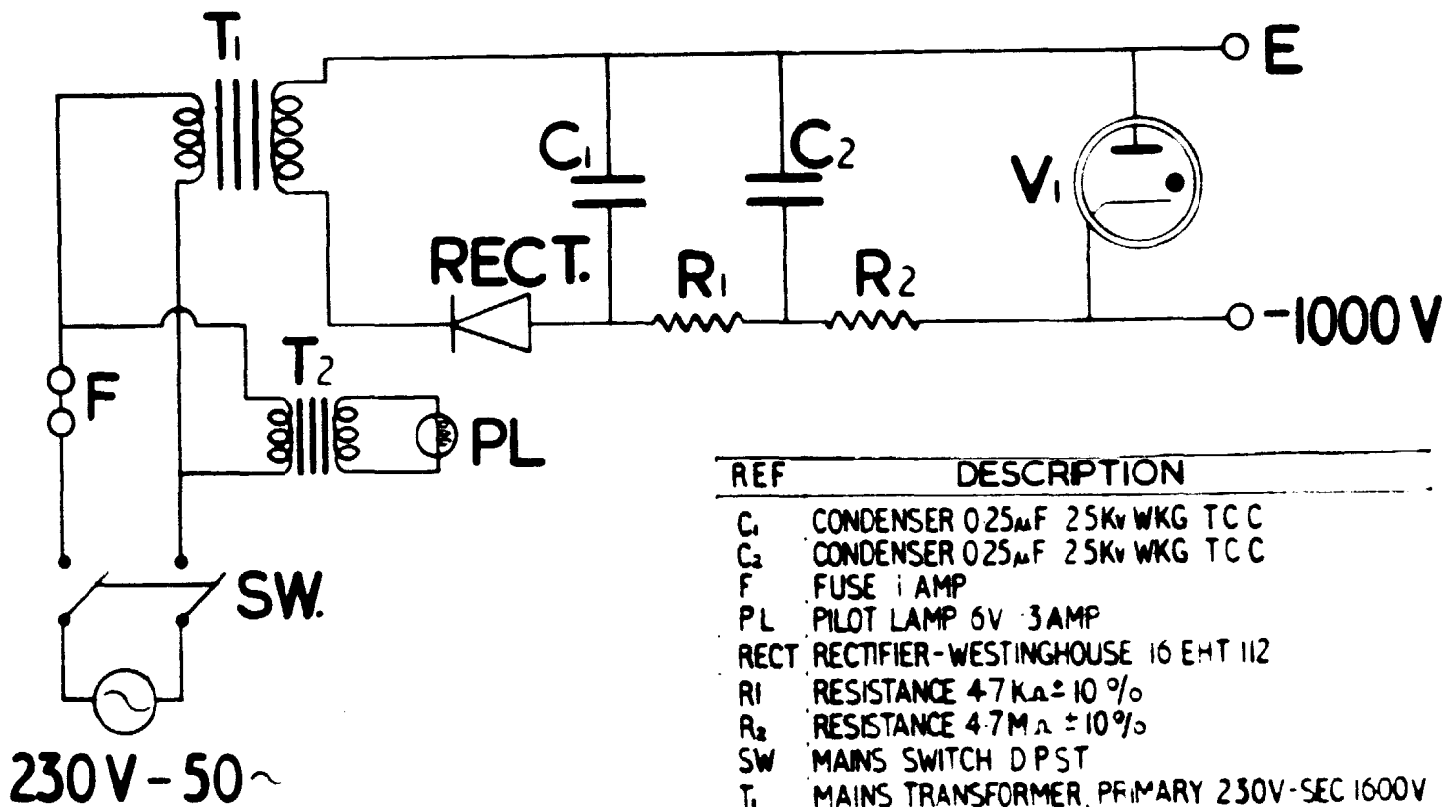

REF	DESCRIPTION
C_1	CONDENSER 0·25μF 25Kv WKG TCC
C_2	CONDENSER 0·25μF 25Kv WKG TCC
F	FUSE 1 AMP
PL	PILOT LAMP 6V ·3AMP
RECT	RECTIFIER-WESTINGHOUSE 16 EHT 112
R_1	RESISTANCE 4·7 KΩ ± 10 %
R_2	RESISTANCE 4·7 MΩ ± 10%
SW	MAINS SWITCH DPST
T_1	MAINS TRANSFORMER, PRIMARY 230V-SEC 1600V
T_2	MAINS TRANSFORMER PRIMARY 230V-SEC 6·3V
V_1	GEC SCI/1000 CORONA STABILIZER

Fig.5. E.H.T. Unit

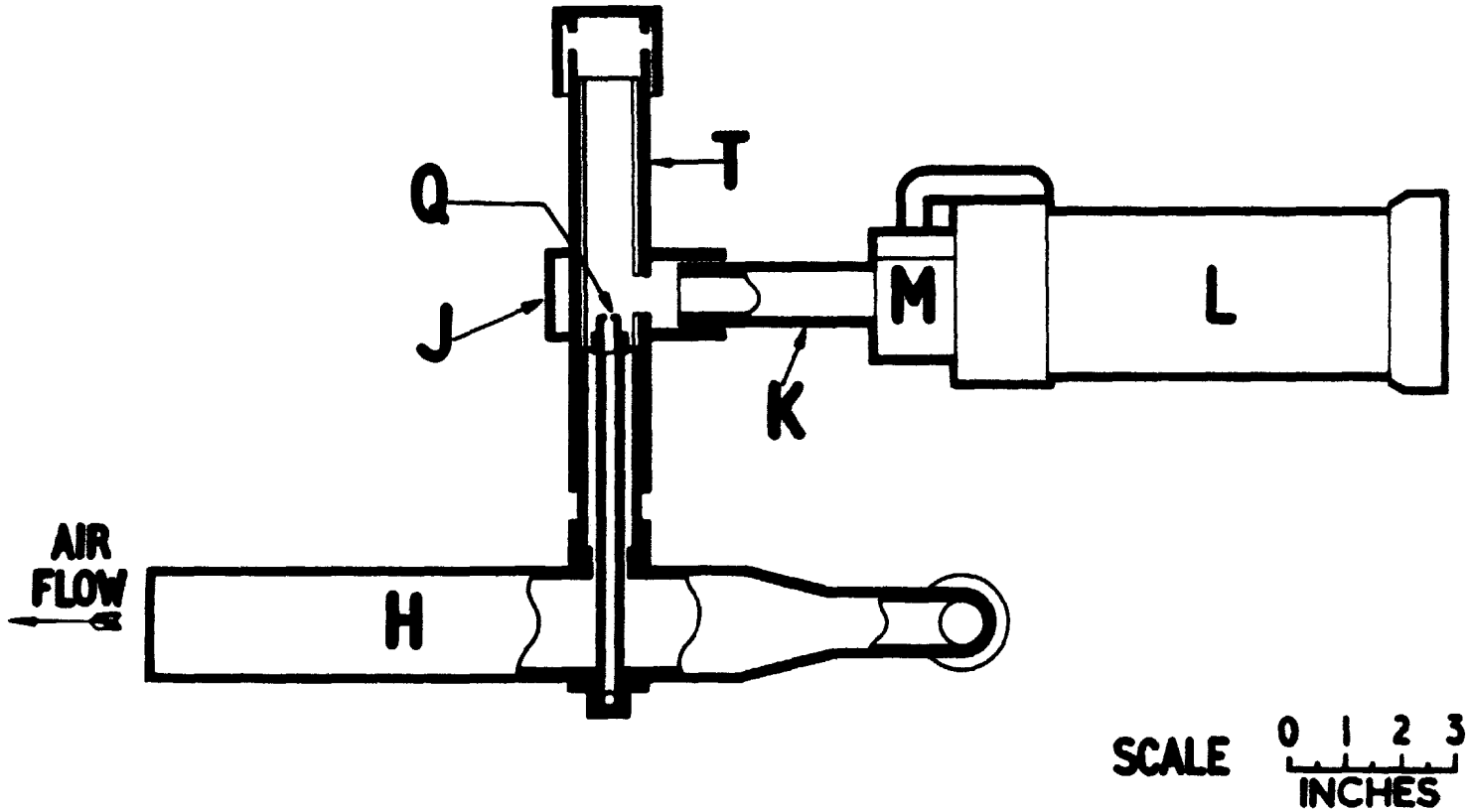

Fig.6. Flame tube assembly

been cleaned as directed) and the pressure adjusted to 1.6 in. water gauge. The sodium interference filter and neutral density filters to the optical density value of at least 3 are placed in the light filter box and the galvanometer turned to the most insensitive range. The flow of air passing along the horizontal tube, H, is adjusted to between 1 and 2 ft^3/min (measured by means of the inclined tube flowmeter), and the photo-multiplier unmasked. After switching the galvanometer to its most sensitive range the neutral density filters are gradually removed, whilst at the same time the galvanometer deflexion is watched. When neutral density filters have been removed in sufficient quantity to give the recommended background deflexion of 5 to 7 cm the apparatus should be left for at least half an hour and the deflexion checked at regular intervals.

It is necessary to follow these instructions carefully to check on the clean air background. If the burner is dirty, or salt contaminated air reaches the flame, the background deflexion will be too large and it is this background which is used in penetration measurements as a check on the stability of the whole apparatus. A small amount of contaminant on the burner will usually clear itself in a few minutes whilst gross contamination may be seen by removing the cowling of the flame tube and inspecting the flame for yellow coloration - the normal flame should be scarcely visible and slightly blue.

A large background reading will also be obtained if there are light leaks in the photo-multiplier housing. Such leaks may usually be detected by wrapping black cloth around places at which light may enter.

When it is obvious that the background is constant the meter reading should be noted and in future work the reading should not vary by more than $\pm$ 10 per cent. As a further check one or two more burners, previously cleaned, ought also to be inserted and should give similar background deflexions. The meter reading should be fairly steady, varying by less than 1 millimetre, although occasional flicks will occur if dust particles or fibres are blown from the filter into the flame. These flicks are especially noticeable with some types of filter such as asbestos paper and may be eliminated, or greatly reduced, by inserting a small coarse filter close to the test cock. A suitable filter may be made from one or two sheets of coarse glass fibre such as that commonly used in battery separators which, being almost completely penetrable by sub-micron particles, stops a negligible amount of effluent salt but removes the fibres. In order to avoid the dangers of clogging this filter should be removed after 20 tests. All tubes and trunking should, of course, be cleaned before the apparatus is used, rubber hosing being washed to remove all traces of french chalk.

2. Main Calibration.

An absolute measure of salt penetration and deflexion is obtained by successive bleedings off and dilutions of the initial cloud (Fig. 7). A small proportion of about 10 l./min of the unfiltered main cloud is bled off from the elbow joint Y, which is of such area that sampling is practically isokinetic, and mixed with a larger volume flow of clean filtered air of the order of 150 l./min. A flow of a few litres per minute of the mixture is diluted with a larger volume of clean air and passed to the horizontal flame tube and hydrogen flame. By varying the proportions, concentrations of from 0.005 to 1 per cent of the original cloud are obtained and the galvanometer deflexion is noted for each concentration. To prevent contamination of the test room the main flow is filtered after it has passed the sampling elbow. It is obvious that the use of a 10 l./min sample from a flow of, say, 500 ft^3/min is only permissible if the cloud is thoroughly mixed before reaching the sampling tube and subsidiary experiments must be carried out by moving the sampling tube across the main trunking to prove that mixing is in fact satisfactory. The deflexion is not

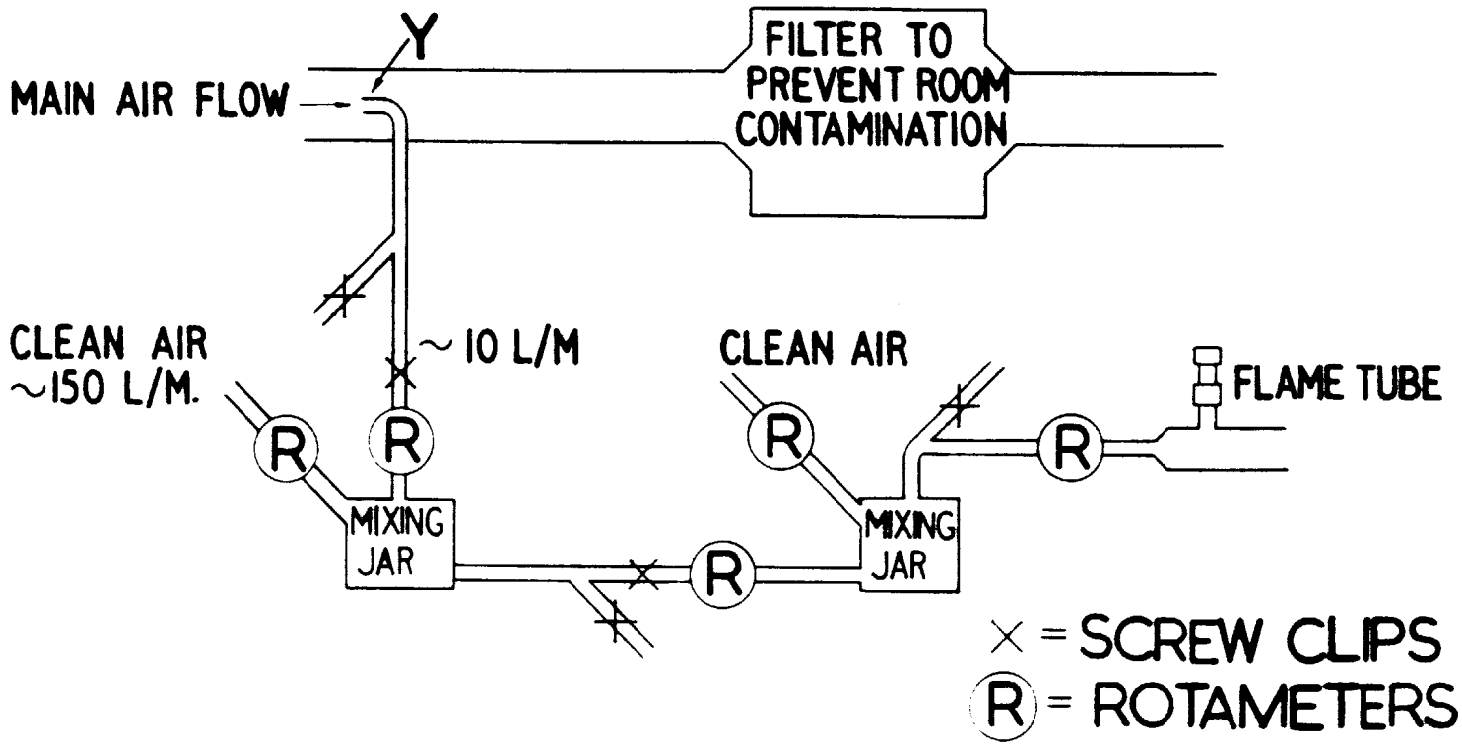

Fig.7. Calibration circuit

read until a few minutes after each flow adjustment has been made in order to be certain that the correct concentration has been reached.

A plot of deflexion against percentage concentration leads to a straight line passing through the origin (Fig. 8). The deflexion is independent of particle size and directly proportional to the mass of salt passing through the flame until high concentrations are reached when the deflexion increases more slowly because of self-absorption in the flame. This will not occur at the concentrations of interest in high efficiency filtration whilst for low efficiency filters it may be avoided by reducing the number of spray orifices.

The flowmeters and tubes must be cleaned thoroughly before calibrating as small particles of dust will colour the flame and cause unsteady galvanometer deflexions. It is also necessary to ensure good mixing of the salt-laden air or else the flame intensity will vary. When these precautions are taken it may still be found that small pulses of air cause fluctuations in the low volume flowmeters, with consequential galvanometer fluctuations, so that errors of $\pm$ 10 per cent in both estimation of concentration and galvanometer reading are possible in any one observation. In practice, by estimation of the mean reading of galvanometer and flowmeters, surprisingly good linearity of deflexion v. concentration graphs has been obtained and, although by careful design of the calibration lay-out the uncertainties could be reduced, a possible small improvement in accuracy does not justify great trouble to achieve it.

Four annual checks have confirmed the original calibration within $\pm$ 10 per cent and although a calibration circuit may be incorporated into the rig there appears to be little need for this.

TESTING OF FILTERS

The electronic apparatus is switched on and a short warming up period allowed. The photo-multiplier dark current is checked and the galvanometer zeroed. The hydrogen flame is lit, the ancillary blower turned on and with the cock on 'Standby' the clean flame reading measured. The filter to be tested is placed in circuit and all flows adjusted to the correct values, the cock turned to 'Test' and the clean flame reading again measured. If this reading is within the limits specified the apparatus is ready for the test to be carried out. Should the reading be outside the limits the fault must be found and remedied before testing begins. Neutral density filters are now inserted, appropriate to the value of the expected air filter penetration, and the salt spray turned on and adjusted to 100 lb/in^2 pressure. The reading of the galvanometer should be steady within a few seconds and a note is made of its value. The spray is switched off, the cock turned to 'Standby' and the filter removed. The apparatus is now ready for the next filter to be tested.

A specimen calculation is given below assuming that on calibration:-

(a) The apparatus gave a clean flame background of 5.0 cm with a neutral density filter of 0.3 and the sodium interference filter in the box.

(b) The deflexion - percentage of main cloud at 200 ft^3/min curve was as shown in Fig. 8.

Let it be assumed that the test is in fact carried out at 400 ft^3/min and a deflexion of 6.3 cm is obtained with a neutral density filter of 1.0 in the light filter box; the clean flame reading with a neutral density of 1.0 is found to be 1.0 cm. The extra deflexion caused by the salt penetration is thus:

$$6.3 - 1.0 = 5.3 \text{ cm.}$$

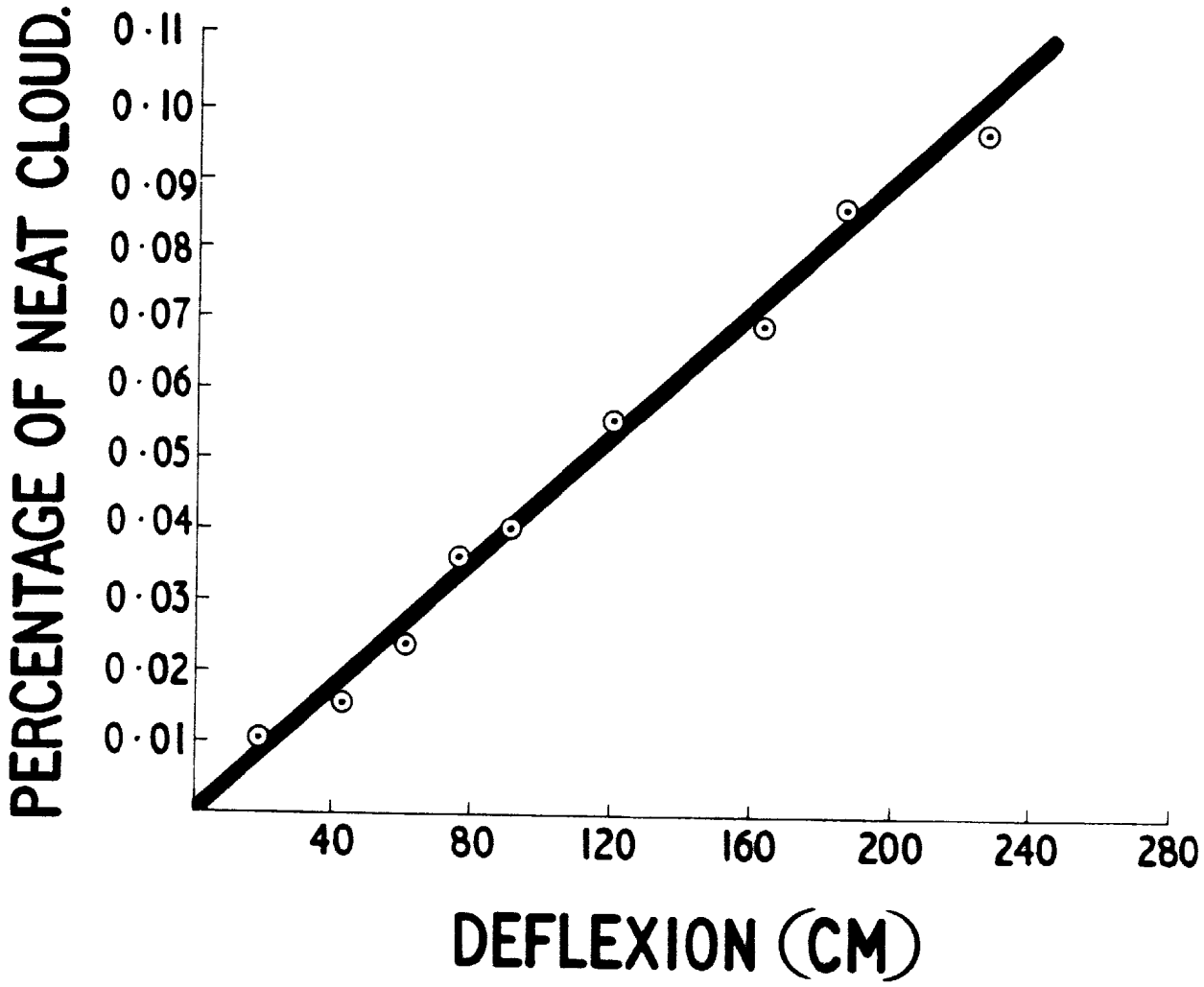

Fig.8. Calibration curve

The deflexion with a neutral density value of 0.3 would have been 5.3 x anti-log (1.0 - 0.3); that is 5.3 x 5 or 26.5 cm.

The test cloud of 400 ft^3/min is only half that of the calibration cloud concentration of 200 ft^3/min so that the deflexion measured must be multiplied by 2, i.e. 26.5 x 2 = 53 cm. The penetration read from Fig. 8 is therefore 0.023 per cent.

Sealing and leakage tests

The presence of leaks in the filter material or sealing can be detected by removing the effluent ducting and searching the filter face by means of a probe attached, by tubing, to the control cock and horizontal flame tube.

MAINTENANCE

Once the apparatus has been set up satisfactorily there should be little need for major maintenance tasks unless the flame tube and burner become grossly contaminated. When the clean flame background is within ± 10 per cent of the normal reading for given values of interference and neutral density filters it may be assumed that the apparatus is functioning correctly. Errors in this reading are likely to be positive - caused by a dirty burner, which must be replaced or, if not badly contaminated, allowed to burn in the clean air stream for a minute or so when the contaminant will probably disappear. With reasonable care any one burner should last for months. In setting up the apparatus new burners should be examined and any with chips or gross faults rejected; the remainder should be heated at the ceramic end by a small pointed air-gas blow pipe flame until the flame is no longer coloured yellow. They should then be tested for uniformity of clean flame background and, if satisfactory, stored in dust-free containers, care being taken to avoid touching the ceramic tips. Experience has shown that there is very little variation from burner to burner, a clean burner rarely differing by more than 5 per cent from the mean of, say, six tested. Errors in the clean flame background may occur because the flat side of the flame is not facing the photo-multiplier, because of lack of co-linearity of flame, chimney window and photo-multiplier cathode or because different glass chimneys have different sizes of windows. When a chimney is changed the calibration curve must be altered by the ratio of clean flame background of new/old chimney. An occasional dusting of the chimney is also required, both inside and outside.

The salt solution should be filtered through a coarse paper or good cloth filter before being used and blockage of the liquid feed will then be unlikely, but regular inspection of the spray nozzle is desirable to ensure that all orifices are functioning properly. Blockage of the high pressure line may occasionally occur, caused by dirt or particles of rubber from the pressure hose, but this fault is immediately apparent as the reading of the high pressure flowmeter will fall. The nozzle must then be removed and cleaned, by turning it upside down and tapping it vigorously on a hard surface or, if this fails, by pricking with blue steel wire. Before closing down the apparatus after the day's work it is advisable to withdraw the nozzles from the salt solution and to clear them of liquid with a short burst of compressed air. The salt solution should be replaced daily, or more frequently if necessary.

N.B. Slight difference may be found between clean flame background readings on 'Test' and 'Standby' if the air from each part of the circuit is not quite of the same standard of cleanliness. This difference should be less than 5 per cent if the apparatus is clean and the reading when the cock is on 'Test' is the one which must be used in calculation.

When the apparatus is used regularly for testing filters of high penetration (1 per cent or greater) it may be found that the burner becomes contaminated and that it must be replaced if the instrument is afterwards required to test high quality filters. It is of course necessary to ensure that the optical filters are kept clean and free from moisture.

COMPARISON WITH METHYLENE BLUE AND DIOCTYL PHTHALATE PENETRATION RESULTS

The concentration and conditions under which the salt is sprayed were deliberately adjusted to provide a salt cloud of approximately the same size distribution as that of the methylene blue cloud so that comparisons could be made between results obtained by the two methods and, although it is expected that the method described here will gradually replace the methylene blue test, there will be no marked break with past results.

A large number of small filters has been tested on the sodium flame apparatus by bleeding off 30 l./min from the main flow and results compared with those found on the laboratory methylene blue rig. Satisfactory agreement has been found for various fibrous materials made into filters of methylene blue penetration from 0.01 to 1 per cent but below the 0.01 per cent level there is a gradual falling off in methylene blue penetration as compared with that of the sodium chloride. It has been shown that these discrepancies at low penetrations are caused by the inefficiency of the esparto test paper in retaining small methylene blue particles which have penetrated the filter under test and are not due to any marked difference in the physical composition of the two clouds. If the sodium flame apparatus were to be used for measuring penetrations much above 1 per cent at high velocities differences between the two methods might become apparent as the inertial effects of the salt particles (density 2.3 g/cm^3) are greater than those of methylene blue (density 1 g/cm^3).

The penetrations of large flow-rate filters (50-500 ft^3/min) have also been compared by the two methods and show good agreement although, as in the case of the small filters, the inefficiency of the esparto paper in the methylene blue test causes errors with high efficiency filters. Discrepancies are also found in results from both small and large flow rate tests for certain types of filters, notably of paper, where clogging rates are high. In such filters, especially those of high efficiency, the clogging during the methylene blue test produces a filter with a higher final efficiency and the figure obtained for the penetration by this test is somewhere between the initial and final true penetrations. In order to obtain a realistic comparison it is necessary to carry out a sodium flame test before and after the methylene blue test and to take the average of the two sodium flame readings.

No direct comparison of the sodium flame and DOP tests has been made on large flow rate filters but comparison tests have been carried out on paper sheets at a velocity of 14 cm/sec on small rigs. The results showed that at the 0.01 per cent penetration level the numerical values of the sodium chloride percentage penetrations were between 2 and 3 times those of the DOP figures. (DOP tests were carried out by DRCL, Ottawa). It should be noted, however, that the test velocity was considerably greater than that normally employed in large volume filter testing and the penetration ratio may alter with velocity.

THE EFFECT OF HUMIDITY ON THE FLAME

As the humidity in the flame tube is increased the galvanometer deflexion decreases. This depressive effect is illustrated in Fig. 9, which was obtained by spraying clean water with a high quality filter in circuit, and is approximately 2 per cent of clean flame background for a 10 per cent increase in relative humidity. Turning on the salt spray increases the relative humidity in the trunking by some 12-15 per cent at 200 ft^3/min (when two atomizers are

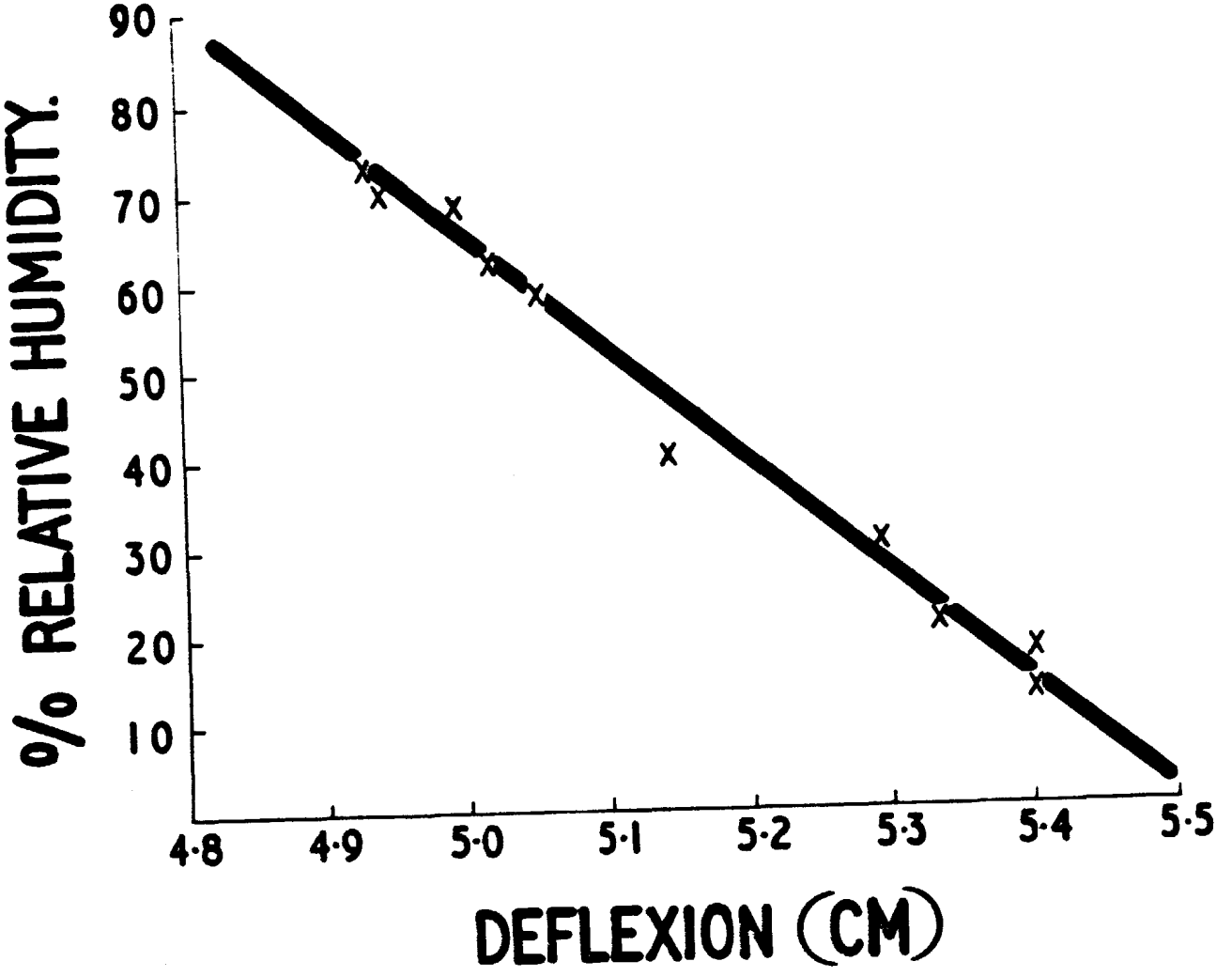

Fig.9. Variation in clean flame deflexion with humidity

employed) so that whilst the salt penetrating causes an increase in galvanometer deflexion this increase is smaller than would be found if no humidity changes were involved. The error involved in measuring penetrations of 0.001 per cent at 200 ft^3/min is thus about 0.0001 per cent, and may be neglected. When, however, the apparatus is employed in testing high quality filters of say, 0.0001 per cent, some allowance must be made for humidity depression of the flame. As an example we may quote the case of two 0.001 per cent penetration filters in series where the deflexion actually decreased when the salt spray was turned on, the whole of this decrease being attributable to the increase in trunking humidity.

DISCUSSION

The apparatus described has been in use for more than four years and has shown itself to be capable of giving reproducible results for filters of from 0.001 to 3 per cent penetration at flow rates of from 50 to 1000 ft^3/min. It is almost instantaneous in its response and its use does not clog the filter under test, this latter being a serious fault of the methylene blue method when used with certain types of filter, notably those made of glass paper of high efficiency. Comparisons with filters tested on the methylene blue apparatus show, in general, a satisfactory agreement and where divergencies exist it can be shown that they are likely to be caused by errors inherent in the use of the methylene blue method.

ACKNOWLEDGMENTS

Thanks are due to J.M. Creasey for electromicrographs of the salt cloud, and to P.D. Yeats for general assistance during the development of the apparatus.

REFERENCES

1. Methods of test for air-filters used in air conditioning and general ventilation. British Standard Specification 2831: 1957.

2. Dorman, R.G. and Yeates, L.E.J., Unpublished report, 1960.

3. Thomas, D.J. and Dorman, R.G., Unpublished report, 1953.

4. Walton, W.H., Unpublished report, 1941.

5. Collison, W.E., "Inhalation Therapy Technique", (Heinemann, London), 1935.

6. Dorman, R.G. and Yeates, L.E.J., Unpublished report, 1962.

HUMIDITY TEST REPORT
NPR HIGH-EFFICIENCY FILTER BID EVALUATION

by

L. J. Nitteberg and R. K. Smith
Hanford Atomic Products Operation
Richland, Washington

I. INTRODUCTION

In order to meet the NPR confinement philosophy, it is essential that the ventilation exhaust air filters be able to pass extremely humid air resulting from an incident which would allow a high discharge of steam to the building atmosphere. To meet the above requirements, each high-efficiency filter in the 117-N Filter Building must be capable of passing a minimum of 825 cfm of 200 F saturated air at a maximum pressure drop of 2.5 inches water gage after having been subjected to this atmosphere for three hours. The filters must exhibit a minimum efficiency of 99.95%, by DOP[1] test when dry, following the aforementioned conditions.

No known test data regarding filter performance requirements was available. It was necessary to construct a unit to perform the desired tests and assure the installation of filters capable of meeting the specified conditions. Limitation of funds prevented installation of instrumentation to the desired degree. Consequently, manual controls were required which necessitates the presence of operating personnel at all times during testing to adjust valves and dampers and to record data.

A series of tests was performed to determine if the prototype filters, submitted by the bidders in accordance with the purchase specification, would meet the requirements previously stated.

An additional requirement was that the adhesives should be self-extinguishing after removal of the igniting flame.

II. SUMMARY

The first set of humidity tests was performed with saturated air at 200 F. Moisture separators were installed upstream of the filters thereby simulating the equipment installation in Cells "A" and "B" (Zone I

---

[1]Minimum efficiency of 99.95% based on dioctyl-phthalate penetration (DOP) of 0.05% for 0.3 micron diameter homogeneous particles at a flow of 1000 cfm when tested in accordance with Military Standard MIL-STD-282.

exhaust) and Cell "D" (standby filters) of the 117-N Filter Building. Results of the tests showed a slight increase in pressure drop across the filters, but in no case did the total pressure drop exceed one inch water gage for flows corrected to 1000 cfm at 200 F. Upon drying, the filters were DOP tested and the required minimum efficiency of 99.95% was met with the exception of one damaged in handling.

The second set of humidity tests was performed with super-saturated air at 200 F. To meet the test requirements, it was necessary to remove the moisture separators used during the first tests. These tests, being conducted without moisture separators, simulated equipment installation of Cell "C" of the 117-N Filter Building. Water droplets formed on both the upstream and downstream faces of the filters and, as would be expected, the pressure drops across the filters were higher than those of the previous tests. Filter pressure drops were approximately two inches water gage or less. Upon drying, the filters were DOP tested and the required minimum efficiency of 99.95% was met with the exception of those damaged in handling.

The third set of humidity tests was performed to determine the ability of filters to meet conditions more severe than actual required test conditions. This third set of tests included spraying water directly on the filters in a 200 F saturated condition atmosphere. Results were inconsistent, but after two hours, three of five filters tested had pressure drop increases ranging from one to two and one-half inches of water. The other two plugged during this same length of time.

All of the above tests were performed on clean filters.

Burning tests verified that the adhesives used by three vendors met the self-extinguishing requirements.

III. FILTER DESCRIPTION

The filter units are of the high-efficiency particulate type measuring 24 inches x 24 inches x 11-1/2 inches deep and have a rating of 1000 cfm (minimum) at one inch water gage static pressure (maximum). Specified minimum efficiency is 99.95% based on dioctyl-phthalate penetration of 0.05% for 0.3 micron diameter homogeneous particles at a flow of 1000 cfm when tested in accordance with Military Standard MIL-STD-282.

The filter media is glass fiber paper of approximately 200 square feet area having a maximum of 5% combustible matter. The media is assembled in approximately 11-1/2 inch deep folds separated by corrugated aluminum sheets.

The frame is of fire resistant exterior plywood. Adhesive is self-extinguishing after removal of the igniting flame.

Gaskets are 3/8 inch thick by 5/8 inch wide ozone resistant, closed cell, expanded rubber or rubber-like material conforming to ASTM D1056, Grade SB41 or SC41.

IV. TEST EQUIPMENT DESCRIPTION AND FUNCTIONS

The test unit is capable of testing two filters simultaneously under high-humidity and high-temperature conditions. The unit consists of the following components listed in the direction of air flow as shown in Figure 1. (See Figures 9, 10, 11, 12, and 13 in the Appendix for pictures of the test unit.)

1. Intake duct.
2. Intake duct damper.
3. Pre-filters.
4. Steam coil.
5. High pressure steam and cold water spray headers with nozzles.
6. Two diffuser plates spaced two feet apart.
7. Cold water coil.
8. Four-inch thick stainless steel mesh moisture separators for each filter test section. (See Figure 14 in the Appendix.)
9. Cold water spray header and nozzles for each filter test section.
10. High-efficiency filter. (See Figure 15 in the Appendix which is a photograph of a tested filter.)
11. Opposed blade damper for each test section.
12. Exhaust fan inlet damper.
13. Exhaust fan.
14. Exhaust fan discharge damper (not used for control due to steam leakage).
15. Discharge duct to atmosphere.

The supply air flow is measured by a pitot-venturi flow element and an inclined manometer. The flow element is mounted in the intake duct (Item 1) and the manometer is mounted nearby on a wall. The manometer readings are converted to air flow based on data supplied by the flow element manufacturer.

Pre-filters (Item 3) are provided to remove lint and dust from the intake air stream.

A steam coil (Item 4) is installed for tempering the intake air as required. The steam flow is regulated by three manually controlled throttling valves of varying sizes to provide the desired conditions. The steam flow may be interrupted by a shut-off gate valve and then returned to service with only minor, if any, adjustment of the throttling valves required.

Steam, sprayed from multiple head nozzles (Item 5), is the main source of high temperature vapor approximating operating conditions during an incident when large amounts of steam may be released to the building atmosphere. The steam flow is regulated by four manually controlled throttling valves of varying sizes. The flow rate is measured by a direct reading flow element. The supply line is also equipped with a gate valve so that the steam flow may be interrupted and then returned to service with only minor adjustments of the throttling valves being required. Pressure gages are installed upstream and downstream of the control valves.

High Efficiency Filter and Moisture Separator Test Equipment

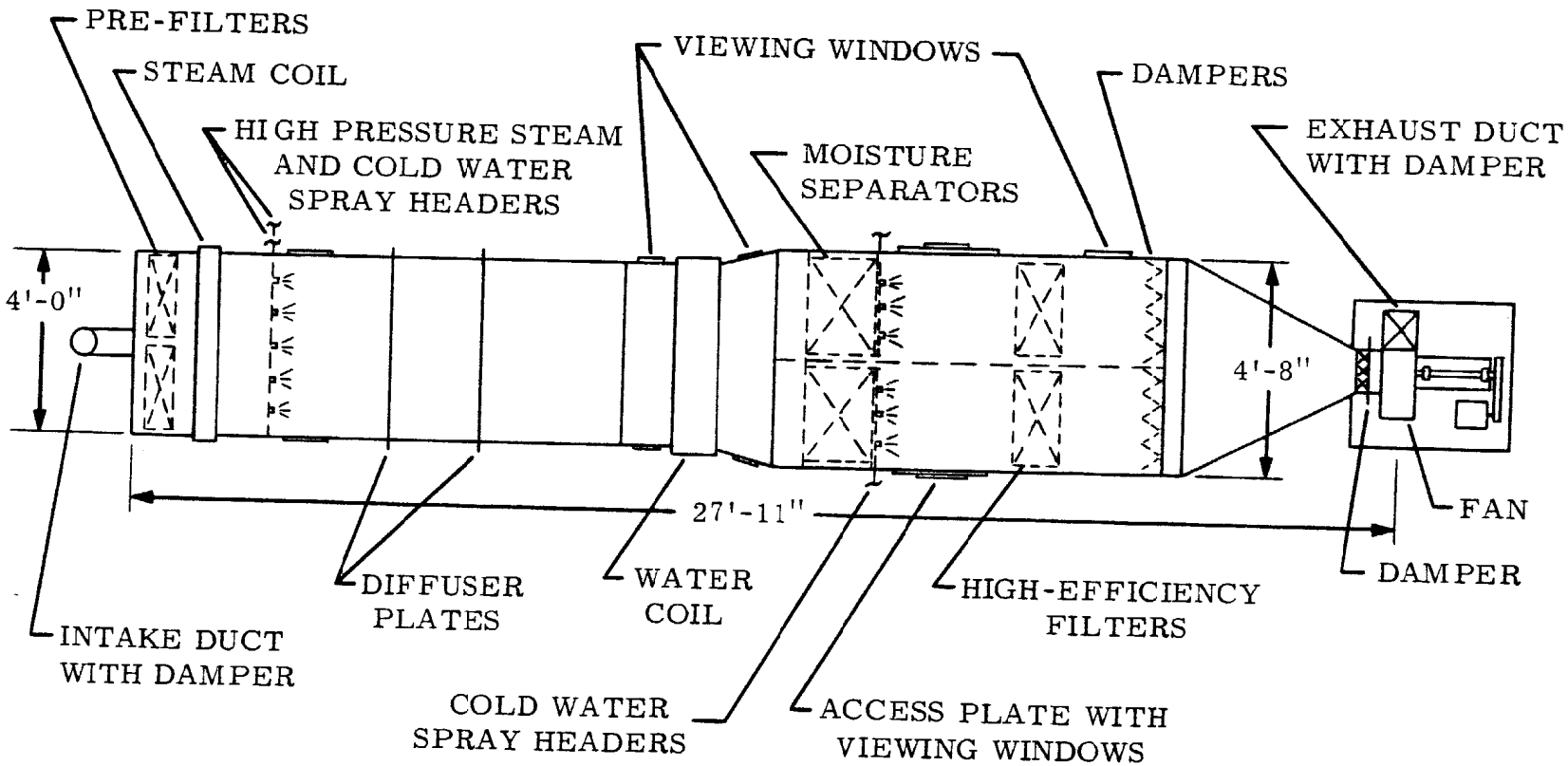

FIGURE 1

A water spray header (Item 5), equipped with multiple head nozzles, is located below the steam spray header and may be used in conjunction with the steam header and/or steam coil to provide the desired test atmosphere. The supply line is equipped with three manually controlled throttling valves of graduated sizes and a shut-off gate valve.

The two diffuser plates (Item 6) assist in mixing the air and steam to secure a homogeneous mixture.

A cold water coil (Item 7) is provided for removing superheat from the steam-air mixture and to provide additional regulation of the test atmosphere conditions. The supply line is equipped with two manually controlled throttling valves.

The test unit is divided into two sections downstream of the water coil. Each section contains a moisture separator (Item 8), access plate, water spray header equipped with nozzles (Item 9), high-efficiency test filter support framing (Item 10), and opposed blade air flow control dampers (Item 11). The moisture separators may be removed for testing the effectiveness of other types of similar units or to permit supersaturated air conditions at the high-efficiency test filters. The filter test section division terminates downstream of the control dampers. The dampers provide individual flow control for each section so that even though there is a variation in the pressure drop between the two test filters, the dampers may be manually controlled to provide similar flows for both filters.

The exhaust fan (Item 13) is of the centrifugal type rated for handling 200 cfm of 200 F saturated air at 14 inches water gage static pressure.

A guillotine damper (Item 12) is installed at the fan suction to provide additional flow control, as required, in conjunction with the filter section control dampers. A fan discharge damper (Item 14) was originally installed for fan flow control but was not used due to steam and water leakage.

Thermometer stations are provided in the air intake duct, downstream of the steam coil, upstream and downstream of the water coil, downstream of each moisture separator, and downstream of each high-efficiency test filter. Standard mercury manometers having ranges of 0 to 200 F and 0 to 600 F were used for temperature measurement.

Hygrometers are installed downstream of the water coil and in each test section downstream of the moisture separators.

Pitot tube air flow stations are located in the air intake duct, downstream of the prefilters, upstream of each high-efficiency test filter, and in the discharge duct.

Manometer connections are installed upstream and downstream of each moisture separator, and upstream and downstream of each high-efficiency test filter. Manometers are provided for indicating the pressure drops across the moisture separators and the filters.

Condensate and water drains are provided at the low points. Traps in each drain are designed to maintain a water seal at all operating pressures. Water is continuously supplied to each trap from a small line to assure the integrity of the water seal during operation.

Viewing windows are located upstream and downstream of the water coil and of each high-efficiency test filter.

The test unit is insulated with the exception of the intake duct, viewing windows, fan, and discharge duct.

The flow in each test section is measured by a propeller-type anemometer mounted on tubing which passes through an opening in the viewing window downstream of the high-efficiency test filter. Anemometer controls are operated by wires passed through the support tubing.

V. HUMIDITY TEST PROCEDURE AND DATA

Three vendors submitted quotations for filters. Each vendor submitted three prototype filters for testing under high humidity conditions. The tests are grouped into the following categories:

A. Saturated Air Flow Tests
B. Super-Saturated Air Flow Tests
C. Water Spray - Air Flow Tests

The total period of time the filters were subjected to test conditions amounted to approximately three hours. It took one or more hours to reach equilibrium due to heat loss from the equipment. Pressure drop across the moisture separators ranged from 0.010 to 0.015 inch water gage static pressure. Some filters were damaged in handling, but even though this caused a higher DOP penetration test result, damage was not extensive enough to affect humidity test conditions.

Figures 2 and 3 show the theoretical weight flow rate of air and steam over a range of saturated air temperatures bracketing the 200 F saturated air temperature design value. Design flow per filter unit is 1000 cfm. Inspection of the test data shows that steam and air flow rates versus the mixture flow compare favorably with the theoretical values. Some variations can be expected due to equipment heat loss and test equipment accuracy. In those tests where one of the filters plugged, the water coil was used also to control mixture temperature. Intake duct air flow was determined by converting the flow element manometer reading to cfm by means of the curve shown in Figure 4 which is based on vendor data. The volume flow rate was then converted to weight flow rate (pounds per minute) from intake air dry bulb and wet bulb temperatures and the respective psychometric chart data. Steam flow rate was read from the steam meter.

The following information was recorded for each test to arrive at information found in the data sheets described later:

1. Test number.
2. Date.
3. Time of test data readings.
4. Steam spray flow rate (pounds per minute).
5. Steam main pressure upstream of spray control valves.
6. Steam main pressure downstream of spray control valves.
7. Intake duct manometer reading (inches water gage).
8. Intake air dry bulb temperature.
9. Intake air wet bulb temperature.
10. Test unit hygrometer readings.
11. Hygrometer reading in each filter unit test section.
12. Air-steam mixture flow for each filter (cfm).

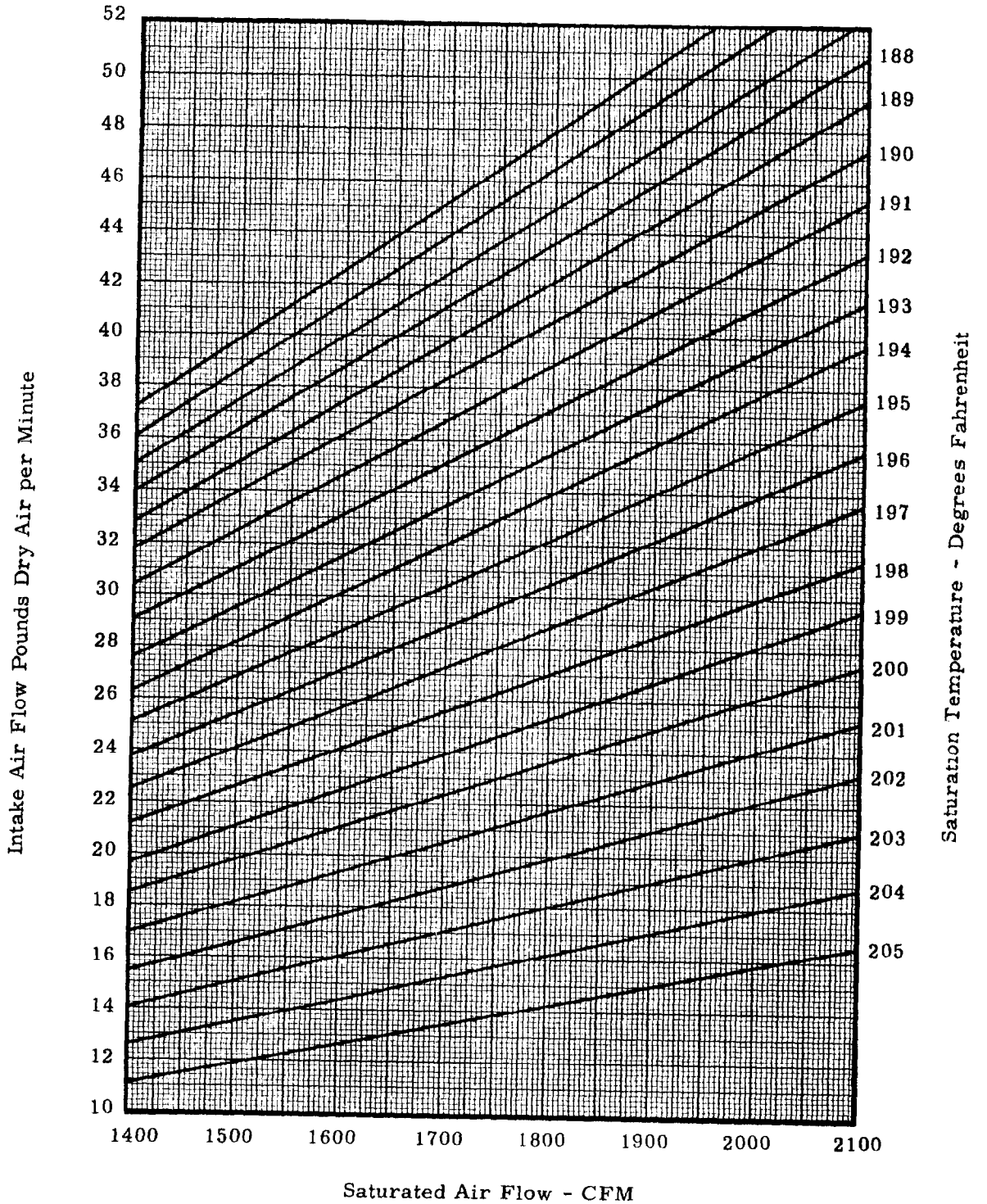

FIGURE 2

Intake Air Flow vs Saturated Air Flow

AEC-GE RICHLAND, WASH

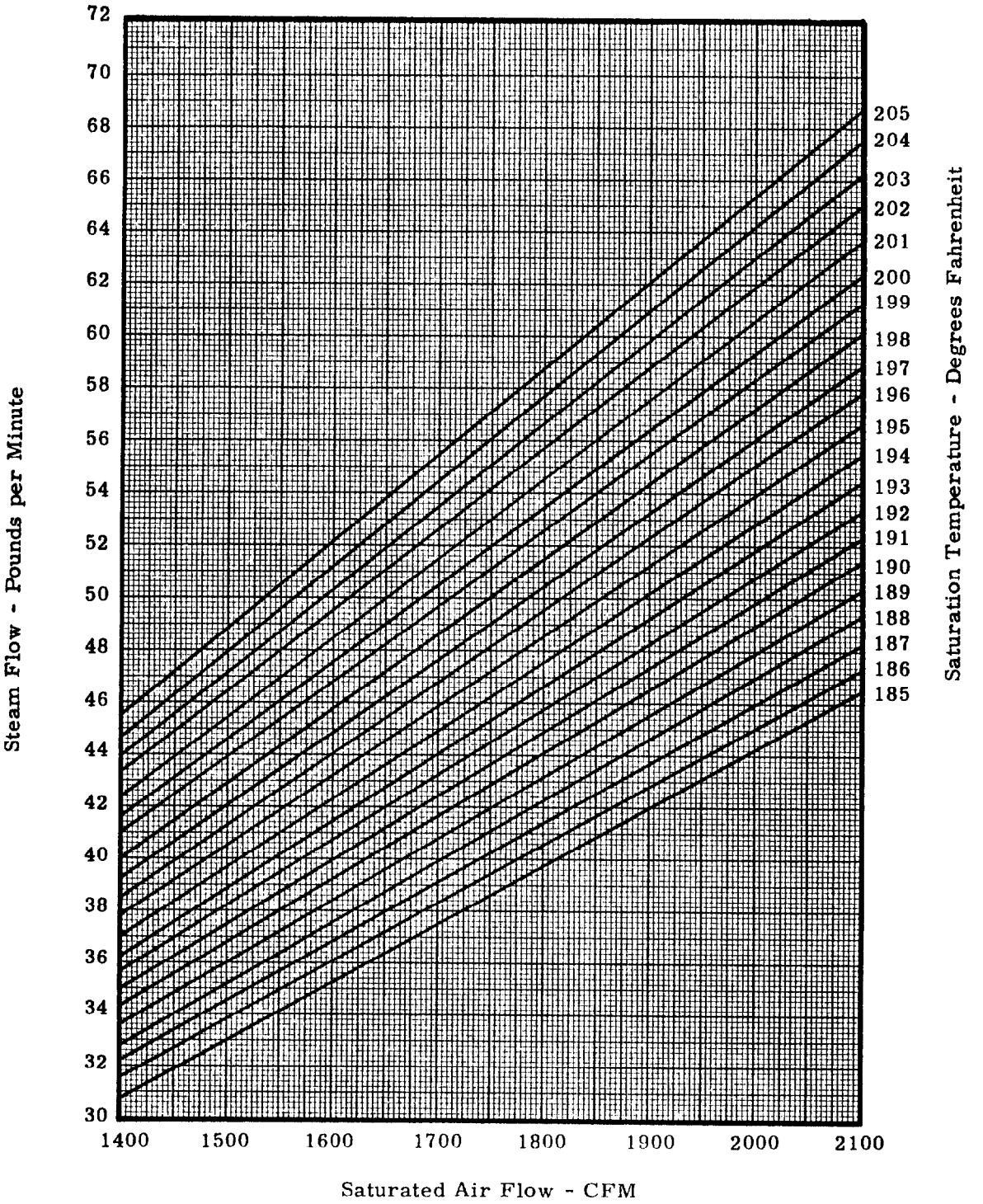

FIGURE 3

Steam Flow vs Saturated Air Flow

AEC-GE RICHLAND, WASH.

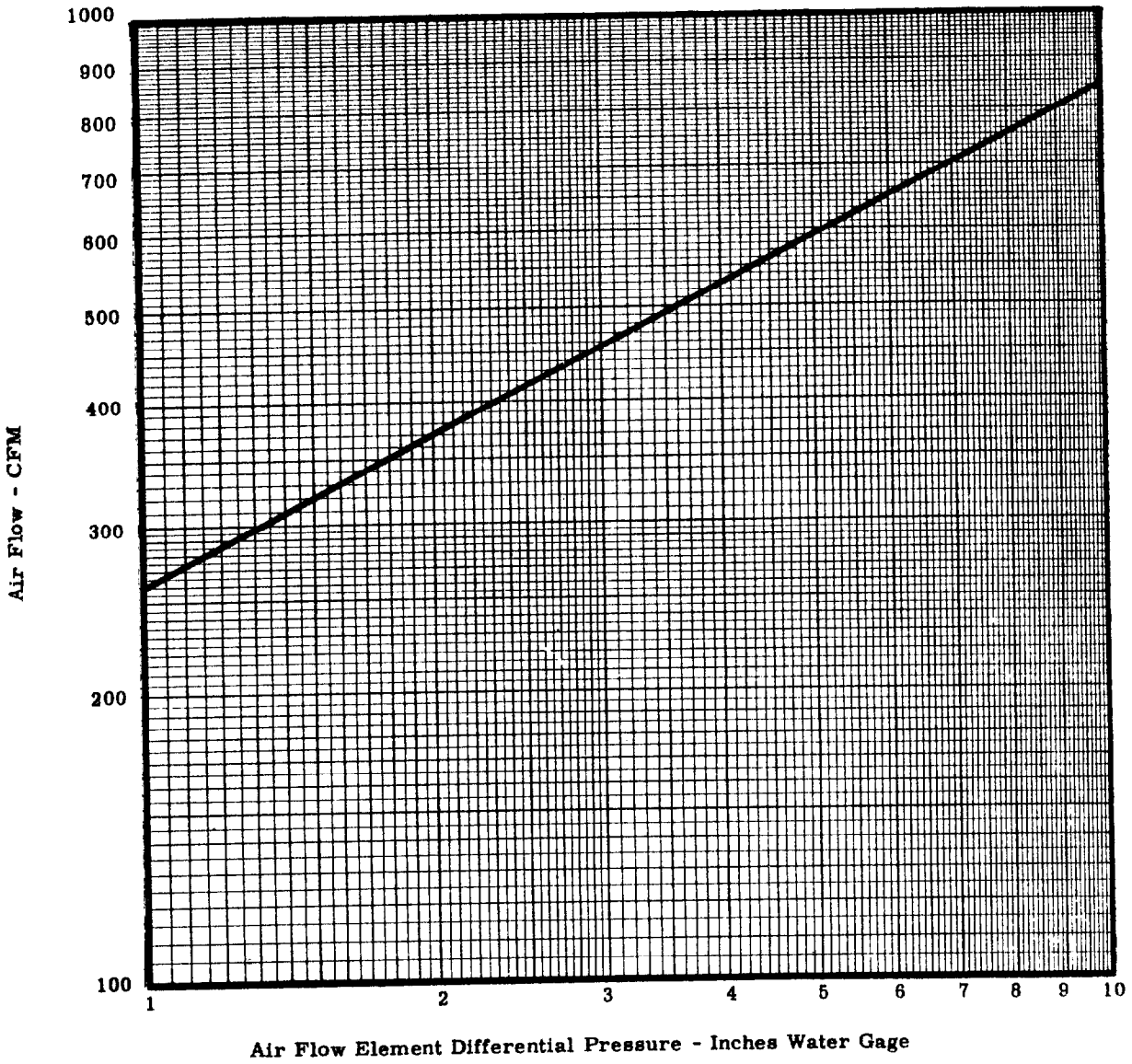

FIGURE 4

Air Flow Element Differential Pressure vs Air Flow

13. Pressure drop across each test filter.
14. Pressure drop across each moisture separator if significant.
15. Fan suction pressure.
16. Fan motor amperage.
17. Remarks on significant observations and on data not itemized.

A. Saturated Air Flow Tests

Two of each vendor's filters were subjected to tests at 200 F saturated air. Steam sprays at the inlet end of the test unit were turned on to supply heat and moisture. No other temperature or humidity sources were operated during this set of tests. The tests were performed with moisture separators installed upstream of the high-efficiency filters thereby simulating the equipment installation in Cells "A" and "B" (Zone I exhaust), and Cell "D" (standby filters) of the 117-N Filter Building.

In general, the initial pressure drop of the filters was 0.5 inch water gage static pressure at a flow corrected to 1000 cfm at 200 F. There was a slight increase in pressure drop across some of the filters. In all cases, the pressure drop was less than one inch water gage static pressure at a flow corrected to 1000 cfm at 200 F. Dioctyl-phthalate penetration and pressure drop tests conducted after the filters were dry showed little change in the DOP penetration and pressure drop tests, with the exception of the increase of the DOP penetration test result for the filter damaged in handling. On the basis of these tests, any of the three vendors who bid would have been able to supply filters capable of meeting the humidity and flow conditions specified in Section I.

Test data are listed in Tables I, II, III, IV, V, and VI. Rate of pressure drop change with respect to time, corrected for a flow of 1000 cfm at 200 F is shown in Figure 5.

B. Super-Saturated Air Flow Tests

The moisture separators, installed upstream of the high-efficiency test filters, were removed to determine the effect of the separators on a moisture laden air stream and to demonstrate their value. This simulates the equipment installation in Cell "C" (Zone II exhaust) of the 117-N Filter Building. Inlet air was pre-heated by the steam coil at the inlet end to approximately 185 F. Steam and water sprays at the inlet end of the unit were turned on to supply heat and moisture. No other temperature or humidity sources were operated during this set of tests.

Filters from all three vendors were comparable in behavior. Water droplets formed on both filter faces approximately 1-1/2 hours after the heating and humidifying operations began. Note that the various pressure drops, corrected to a flow of 1000 cfm, shown in Figure 6, are very close for two hours of testing (plus warm-up time of approximately one hour) but that the pressure drop rapidly increased during the additional one-half hour of testing conducted during Test Number 6.

Test data are listed in Tables VII, VIII, IX, and X. Variation in pressure drop with time, corrected to a flow of 1000 cfm, is shown in Figure 6.

TABLE I

Humidity Test No. 1

Date: 10-22-62

Time of Test	Steam Flow lbs/min[1]	Air Flow lbs/min	Filter No. A-2[2] Flow cfm	Filter No. A-2[2] Pressure Drop, in. of Water	Filter No. A-2[2] Pressure Drop at 1000 cfm	Filter No. C-2[2] Flow cfm	Filter No. C-2[2] Pressure Drop, in. of Water	Filter No. C-2[2] Pressure Drop at 1000 cfm
12:30 p.m.	30.5	30.5	1010	0.5	0.495	960	0.5	0.567
1:30 p.m.	30.5	30.5	960	0.55	0.568	985	0.5	0.507
2:30 p.m.	30.5	30.5	943	0.55	0.577	995	0.5	0.502

[1]Nominal steam pressure at main was 100 psig.
Nominal steam pressure downstream of valves was 75 psig.

[2]Air-steam mixture flow nominally at 200 F saturated.
Test flow pressure drops are corrected for a flow of 1000 cfm for comparison.

TABLE II

Humidity Test No. 1
Filter DOP Penetration and Pressure Drop

Test	Filter No. A-2 Before Test	Filter No. A-2 After Test	Filter No. C-2 Before Test	Filter No. C-2 After Test
DOP (Percent Penetration)	0.006	0.16*	0.018	0.016
Pressure Drop (Inches of Water)	0.88	0.84	0.74	0.74

*Damaged in handling

TABLE III

Humidity Test No. 2

Date: 10-23-62

Time of Test	Steam Flow lbs/min[1]	Air Flow lbs/min	Filter No. B-2[2] Flow cfm	Filter No. B-2[2] Pressure Drop, in. of Water	Filter No. B-2[2] Pressure Drop at 1000 cfm	Filter No. C-3[2] Flow cfm	Filter No. C-3[2] Pressure Drop, in. of Water	Filter No. C-3[2] Pressure Drop at 1000 cfm
11:00 a.m.	59.5	32.3	856	0.65	0.76	1006	0.47	0.467
12:00 noon	59.5	29.3	864	0.60	0.695	974	0.43	0.442
1:00 p.m.	59.5	28.9	864	0.60	0.695	974	0.43	0.442
2:00 p.m.	59.5	31.5	1010	0.60	0.594	1016	0.47	0.462
2:15 p.m.	59.5	31.5	865	0.65	0.752	1006	0.47	0.467

[1]Nominal steam pressure at main was 180 psig.
Nominal steam pressure downstream of valves was 75 psig.

[2]Air-steam mixture flow nominally at 200 F saturated. Test flow pressure drops are corrected for a flow of 1000 cfm for comparison.

TABLE IV

Humidity Test No. 2
Filter DOP Penetration and Pressure Drop

Test	Filter No. B-2 Before Test	Filter No. B-2 After Test	Filter No. C-3 Before Test	Filter No. C-3 After Test
DOP (Percent Penetration)	0.004	0.004	0.016	0.018
Pressure Drop (Inches of Water)	0.86	0.86	0.73	0.70

TABLE V

Humidity Test No. 3

Date: 10-24-62

Time of Test	Steam Flow lbs/min[1]	Air Flow lbs/min	Filter No. B-1[2] Flow cfm	Filter No. B-1[2] Pressure Drop, in. of water	Filter No. B-1[2] Pressure Drop at 1000 cfm	Filter No. A-3[2] Flow cfm	Filter No. A-3[2] Pressure Drop, in. of Water	Filter No. A-3[2] Pressure Drop at 1000 cfm
11:00 a.m.	59.5	31.7	996	0.45	0.452	1011	0.50	0.494
12:00 noon	59.5	30.3	996	0.65	0.652	996	0.50	0.502
1:00 p.m.	59.5	30.2	996	0.70	0.703	996	0.50	0.502

[1]Nominal steam pressure at main was 180 psig.
Nominal steam pressure downstream of valves was 75 psig.

[2]Air-steam mixture flow nominally at 200 F saturated. Test flow pressure drops are corrected for a flow of 1000 cfm for comparison.

TABLE VI

Humidity Test No. 3
Filter DOP Penetration and Pressure Drop

Test	Filter No. B-1 Before Test	Filter No. B-1 After Test	Filter No. A-3 Before Test	Filter No. A-3 After Test
DOP (Percent Penetration)	0.005	0.004	0.008	0.006
Pressure Drop (Inches of Water)	0.86	0.88	0.90	0.84

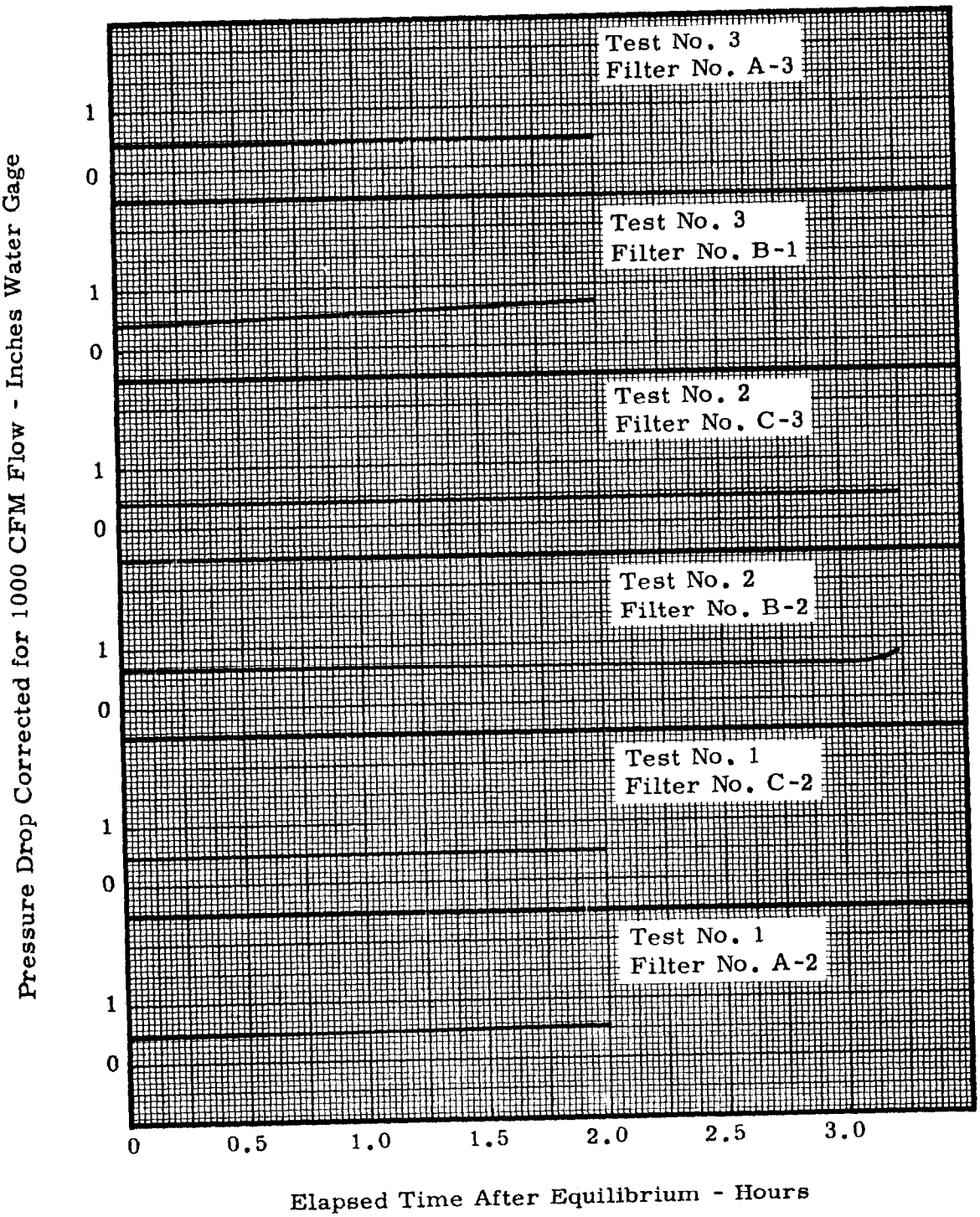

FIGURE 5

Saturated Air Flow Tests

AEC-GE RICHLAND, WASH

TABLE VII

Humidity Test No. 6

Date: 11-7-62

Time of Test	Steam Flow lbs/min[1]	Air Flow lbs/min	Filter No. C-2[2] Flow cfm	Filter No. C-2[2] Pressure Drop, in. of Water	Filter No. C-2[2] Pressure Drop at 1000 cfm	Filter No. C-3[2] Flow cfm	Filter No. C-3[2] Pressure Drop, in. of Water	Filter No. C-3[2] Pressure Drop at 1000 cfm
11:30 a.m.	59.5	25.4	1016	0.9	0.886	1016	0.9	0.886
11:45 a.m.	59.5	25.4	995	0.9	0.905	1020	0.9	0.882
12:00 noon	59.5	25.4	995	0.9	0.905	1020	1.1	1.08
12:15 p.m.	59.5	25.4	1005	0.9	0.895	1017	0.9	0.885
12:30 p.m.	59.5	25.4	1010	1.1	1.09	1017	1.1	1.082
1:00 p.m.	59.5	25.4	990	1.0	0.99	1020	1.4	1.37
1:30 p.m.	59.5	22.5	990	1.5	1.515	995	1.5	1.51
2:00 p.m.	59.5	20.8	974	1.9	1.95	985	1.9	1.93

[1]Nominal steam pressure at main was 180 psig.
Nominal steam pressure downstream of valves was 75 psig.

[2]Air steam mixture flow nominally at 200 F saturated. Test flow pressure drops are corrected for a flow of 1000 cfm for comparison.

TABLE VIII

Humidity Test No. 6
Filter DOP Penetration and Pressure Drop

Test	Filter No. C-2 Before Test	Filter No. C-2 After Test	Filter No. C-3 Before Test	Filter No. C-3 After Test
DOP (Percent Penetration)	0.016	0.88*	0.018	0.12*
Pressure Drop (Inches of Water)	0.74	0.70	0.70	0.68

*Damaged in handling

TABLE IX

Humidity Test No. 7

Date: 11-13-62

Time of Test	Steam Flow lbs/min[1]	Air Flow lbs/min	Filter No. A-2[2] Flow cfm	Filter No. A-2[2] Pressure Drop, in. of Water	Filter No. A-2[2] Pressure Drop at 1000 cfm	Filter No. B-3[2] Flow cfm	Filter No. B-3[2] Pressure Drop, in. of Water	Filter No. B-3[2] Pressure Drop at 1000 cfm
10:30 a.m.	59.5	24.6	1005	0.9	0.895	1020	0.9	0.882
10:45 a.m.	59.5	24.4	990	0.9	1.1	1000	0.9	0.9
11:00 a.m.	59.5	24.4	1000	1.0	1.0	1020	1.0	0.98
11:15 a.m.	59.5	24.6	995	1.0	1.005	1015	1.0	0.985
11:30 a.m.	59.5	24.4	1000	1.2	1.2	1020	1.2	1.175
12:00 noon	59.5	22.5	975	1.5	1.54	980	1.5	1.53
12:30 p.m.	59.5	22.2	980	1.5	1.53	980	1.5	1.53

[1]Nominal steam pressure at main was 180 psig.
Nominal steam pressure downstream of valves was 75 psig.

[2]Air-steam mixture flow nominally at 200 F saturated. Test flow pressure drops are corrected for a flow of 1000 cfm for comparison.

TABLE X

Humidity Test No. 7
Filter DOP Penetration and Pressure Drop

Test	Filter No. A-2 Before Test	Filter No. A-2 After Test	Filter No. B-3 Before Test	Filter No. B-3 After Test
DOP (Percent Penetration)	0.16*	0.24*	0.010	0.010
Pressure Drop (Inches of Water)	0.84	0.84	1.0	0.87

*Damaged in handling

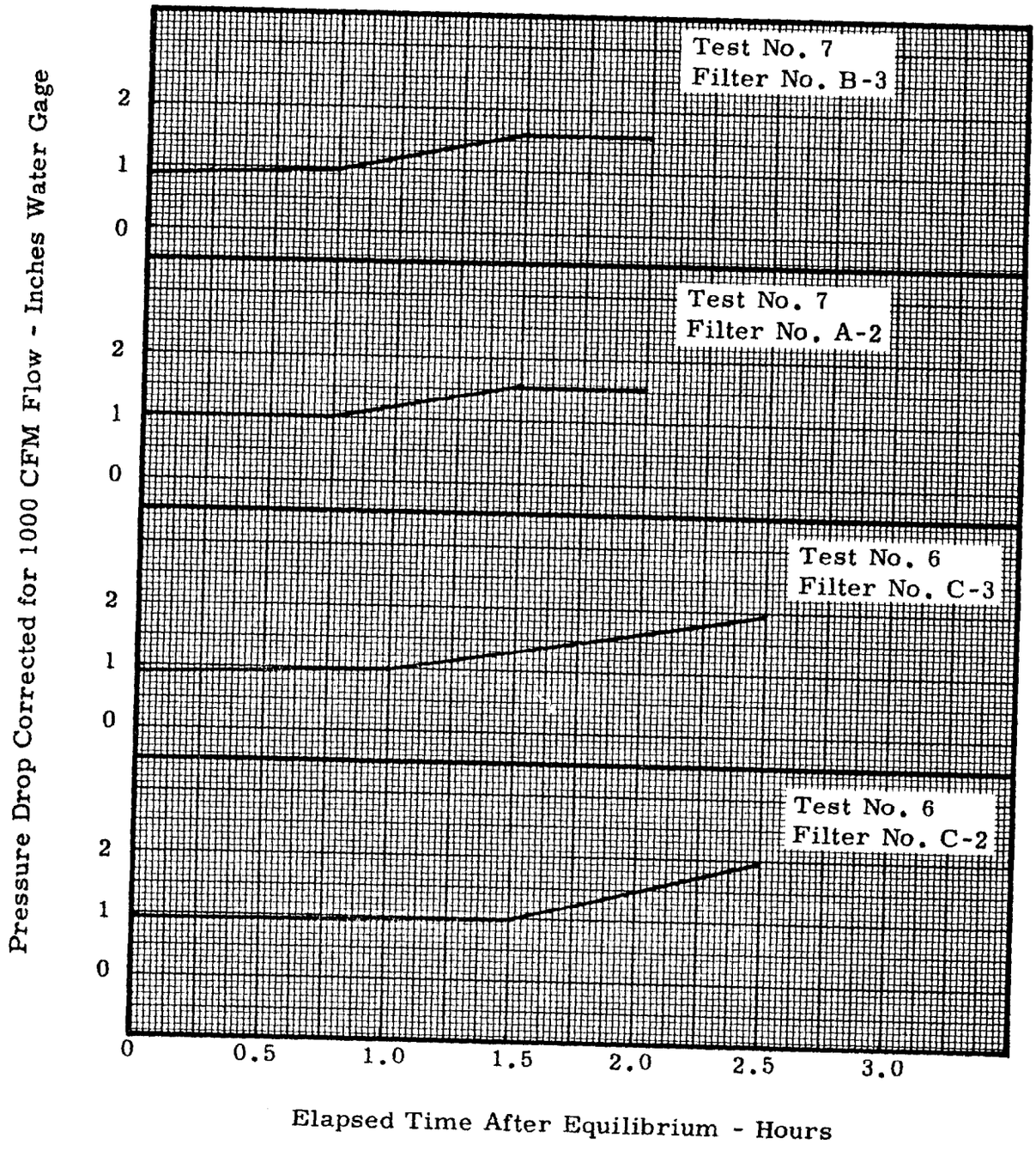

FIGURE 6

Super-Saturated Air Flow Tests

AEC-GE RICHLAND WASH

C. Water Spray - Air Flow Tests

Steam sprays at the inlet end of the unit were turned on to supply heat and moisture. After equilibrium had been established at 200 F saturated air conditions, the water sprays immediately upstream of the filters were turned on to determine the performance of water drenched filters. The water coil was turned on during the tests when a plugged filter created a rapid rise in the test unit temperature. No other temperature or humidity sources were operated during this set of tests.

One test filter supplied by vendor "A" plugged 25 minutes after the water sprays were turned on. A test on another filter furnished by vendor "A" showed a pressure increase of less than one inch water gage for a corrected flow of 1000 cfm during a test period of one hour and 40 minutes.

One of the filters supplied by vendor "B" plugged in two hours and 30 minutes. A different filter supplied by vendor "B" was tested for one hour and 40 minutes and showed an increase of 2.3 inches water gage pressure drop before termination of the test.

One filter supplied by vendor "C" was subjected to this set of tests and showed an increase of 1.4 inches water gage pressure drop over a period of one hour and 15 minutes and then remained constant until the test was terminated one hour and 15 minutes later.

Test results were inconsistent.

Test data are listed in Tables XI, XII, XIII, XIV, XV, and XVI. Variation in pressure drop with time, corrected to a flow of 1000 cfm, is shown in Figures 7 and 8.

TABLE XI

Humidity Test No. 4

Date: 10-24-62

Time of Test	Steam Flow lbs/min[1]	Air Flow lbs/min	Filter No. B-3[2] Flow cfm	Filter No. B-3[2] Pressure Drop, in. of Water	Filter No. B-3[2] Pressure Drop at 1000 cfm	Filter No. A-1[2] Flow cfm	Filter No. A-1[2] Pressure Drop, in. of Water	Filter No. A-1[2] Pressure Drop at 1000 cfm
11:45 a.m.	57.4	26.8	1048	0.92	0.88	1048	0.50	0.478
12:00 noon	Water spray turned on filters.							
12:25 p.m.	Filter No. A-1 plugged causing rapid rise in air temperature.							
12:35 p.m.	42	--	1677	2.1	1.25	0	--	--
1:15 p.m.	42	35.7	1000	1.2	1.2	0	--	--
2:10 p.m.	42	23.8	460	3.5	7.62	0	--	--
2:30 p.m.	Filter No. B-3 plugged.							

[1]Nominal steam pressure at main was 180 psig.
Nominal steam pressure downstream of valves was 75 psig.

[2]Air-steam mixture flow nominally at 200 F saturated. Test flow pressure drops are corrected for a flow of 1000 cfm for comparison.

TABLE XII

Humidity Test No. 4
Filter DOP Penetration and Pressure Drop

Test	Filter No. B-3 Before Test	Filter No. B-3 After Test	Filter No. A-1 Before Test	Filter No. A-1 After Test
DOP (Percent Penetration)	0.006	0.010	0.004	0.004
Pressure Drop (Inches of Water)	0.92	1.0	0.9	0.88

TABLE XIII

Humidity Test No. 5

Date: 10-26-62

Time of Test	Steam Flow lbs/min[1]	Air Flow lbs/min	Filter No. X[2] Flow cfm	Filter No. X[2] Pressure Drop, in. of Water	Filter No. X[2] Pressure Drop at 1000 cfm	Filter No. C-1[2] Flow cfm	Filter No. C-1[2] Pressure Drop, in. of Water	Filter No. C-1[2] Pressure Drop at 1000 cfm
12:00 noon	59.5	28	--	--	--	1000	0.5	0.5
	Water spray turned on filters							
12:10 p.m.	59.5	27.4	--	--	--	1000	0.9	0.9
12:20 p.m.	59.5	28	Spare filter plugged			1000	1.8	1.8
12:30 p.m.	59.5	25	--	--	--	1000	2.2	2.2
12:45 p.m.	59.5	18.25	--	--	--	1000	2.1	2.1
1:00 p.m.	59.5	--	--	--	--	1000	1.7	1.7
1:15 p.m.	59.5	--	--	--	--	1000	1.9	1.9
1:30 p.m.	59.5	20.2	--	--	--	1000	1.9	1.9
1:45 p.m.	59.5	20.2	--	--	--	1000	1.9	1.9
2:00 p.m.	59.5	19.3	--	--	--	1000	1.9	1.9

[1]Nominal steam pressure at main was 180 psig.
Nominal steam pressure downstream of valves was 75 psig.

[2]Air-steam mixture flow nominally at 200 F saturated. Test flow pressure drops are corrected for a flow of 1000 cfm for comparison.

TABLE XIV

Filter DOP Penetration and Pressure Drop

Humidity Test No. 5	Filter No. X Before Test	Filter No. X After Test	Filter No. C-1 Before Test	Filter No. C-1 After Test
DOP (Percent Penetration)	--	--	0.028	0.74*
Pressure Drop (Inches of Water)	--	--	0.076	0.80

*Damaged in handling

TABLE XV

Humidity Test No. 8

Date: 12-4-62

Time of Test	Steam Flow lbs/min[1]	Air Flow lbs/min	Filter No. A-3[2] Flow cfm	Filter No. A-3[2] Pressure Drop, in. of Water	Filter No. A-3[2] Pressure Drop at 1000 cfm	Filter No. B-1[2] Flow cfm	Filter No. B-1[2] Pressure Drop, in. of Water	Filter No. B-1[2] Pressure Drop at 1000 cfm
11:00 a.m.	59.5	31.6	1021	0.6	0.587	1021	0.6	0.587
11:15 a.m.	59.5	30.6	1021	0.5	0.49	1021	0.5	0.49
11:20 a.m.	Water spray turned on filters.							
11:30 a.m.	59.5	30.6	1021	0.9	0.881	1021	0.8	0.783
11:45 a.m.	59.5	30.6	1021	0.9	0.881	1021	0.8	0.783
12:00 noon	59.5	30.5	1010	1.1	1.09	1028	1.0	0.974
12:15 p.m.	59.5	30.5	979	1.1	1.125	985	0.9	0.914
12:30 p.m.	59.5	26.5	1010	1.3	1.288	1026	1.3	1.268
12:45 p.m.	59.5	18.5	1010	1.5	1.485	1020	2.5	2.45
1:00 p.m.	59.5	20.5	1010	1.5	1.485	1000	2.9	2.9

[1]Nominal steam pressure at main was 180 psig.
Nominal steam pressure downstream of valves was 75 psig.
[2]Air-steam mixture flow nominally at 200 F saturated. Test flow pressure drops are corrected for a flow of 1000 cfm for comparison.

TABLE XVI

Filter DOP Penetration and Pressure Drop

Humidity Test No. 8	Filter No. A-3 Before Test	Filter No. A-3 After Test	Filter No. B-1 Before Test	Filter No. B-1 After Test
DOP (Percent Penetration)	0.006	0.008	0.004	0.034
Pressure Drop (Inches of Water)	0.84	0.84	0.034	1.5*

*Filter was not completely dry.

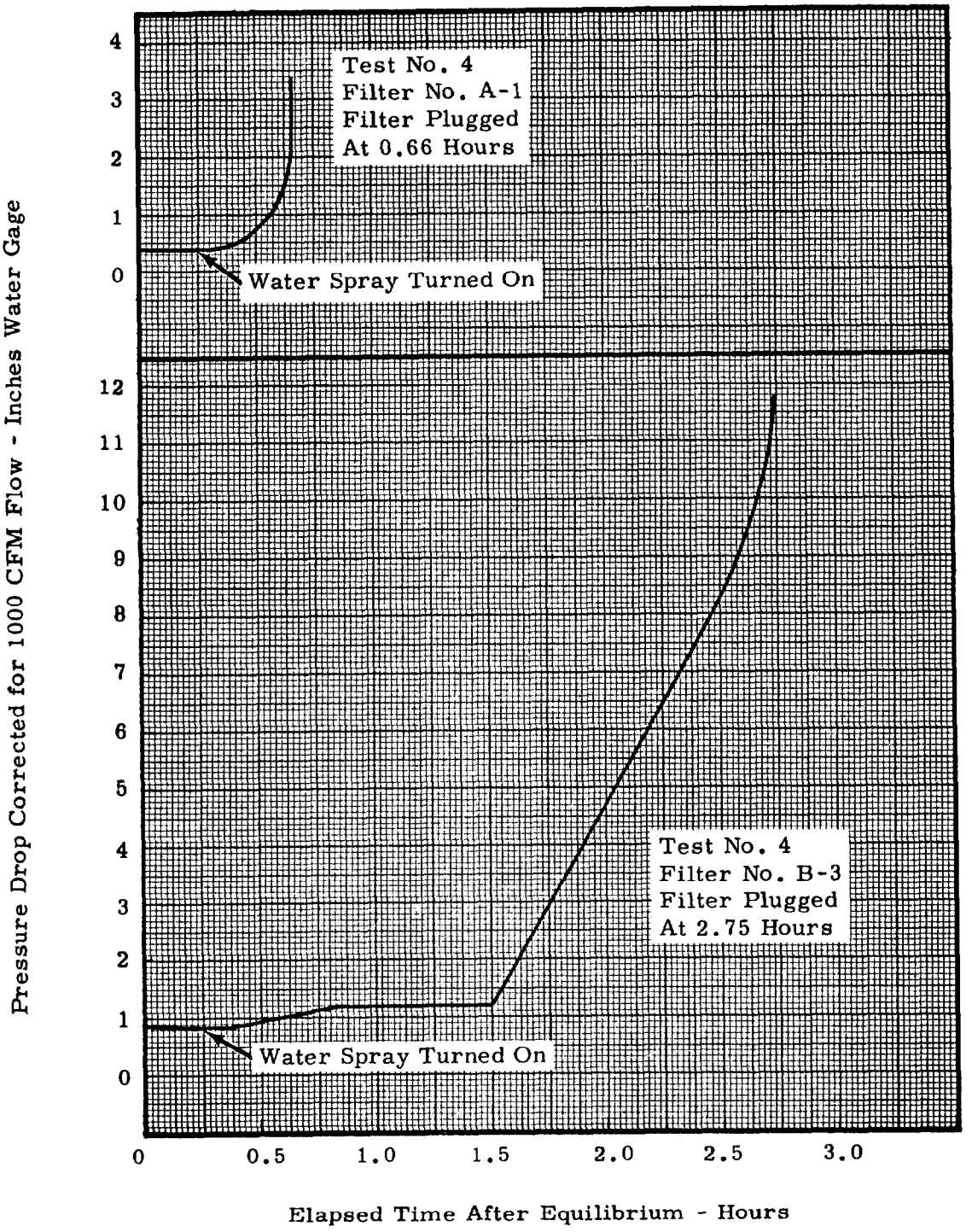

FIGURE 7

Water Spray - Air Flow Tests

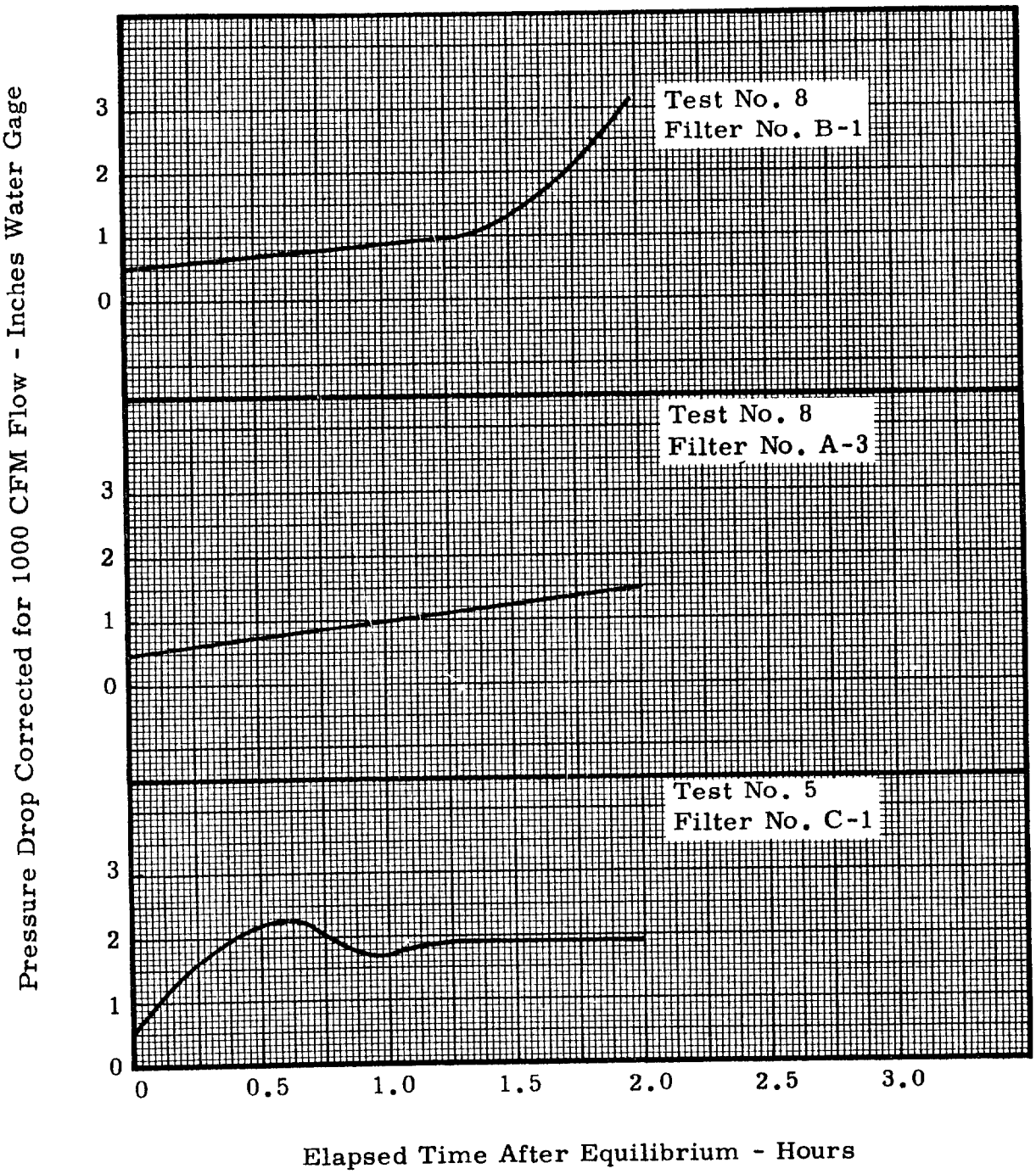

FIGURE 8

Water Spray - Air Flow Tests

VI. GLUE AND ADHESIVE BURNING TEST PROCEDURE AND DATA

Glue and adhesive samples from the three filter bidders were tested for fire resistance characteristics. The tests were performed by smearing a sample 2 inches by 5 inches on a piece of transite and then applying the flame of an oxyacetylene torch to each sample after it had dried.

Test results are as follows:

Bidder "A" - Media glue burned two and one-half minutes after flame removed. Black color smoke evolved.

Bidder "B" - Media glue burned two minutes after flame removed. Light color smoke evolved.

Bidder "C" - Original glue sample failed to ignite.

Bidder "C" - Substituted glue sample burned two minutes after flame removed. Light color smoke evolved.

APPENDIX

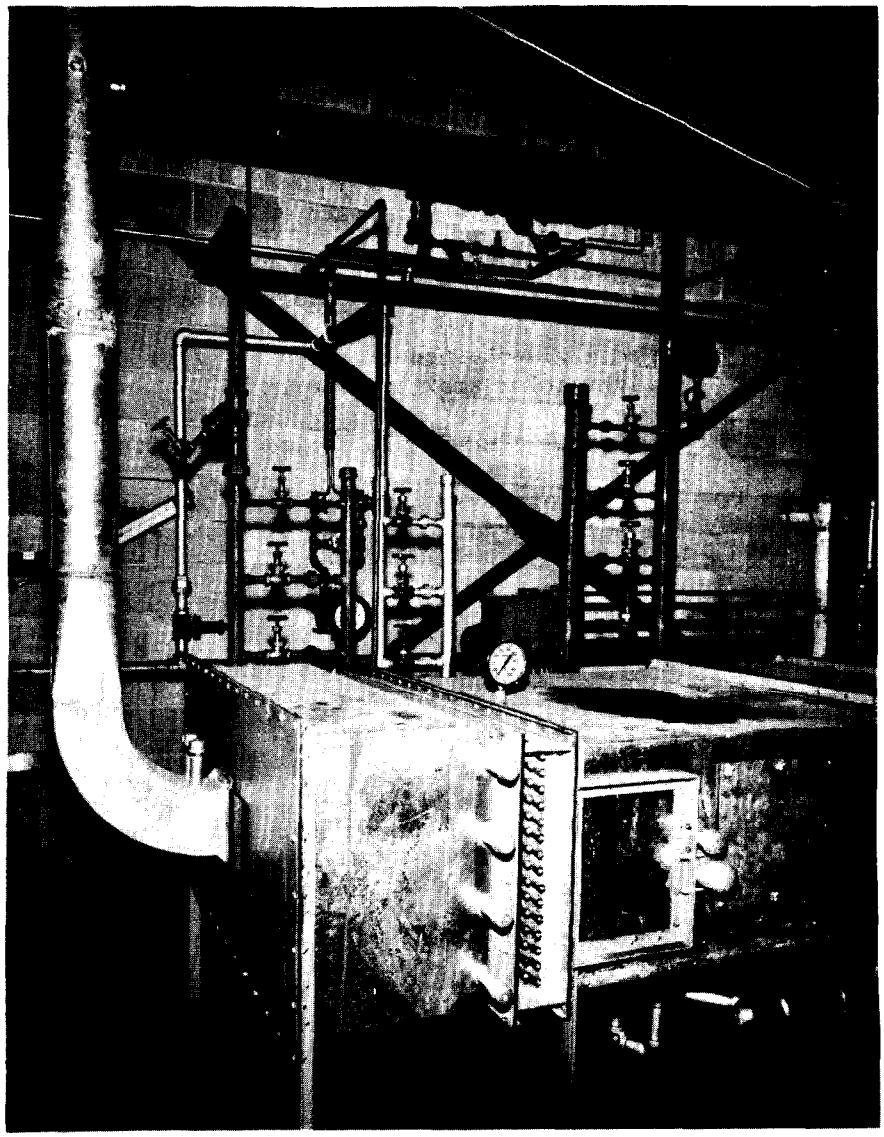

FIGURE 9

HUMIDITY TEST UNIT - UNINSULATED
AIR INTAKE END

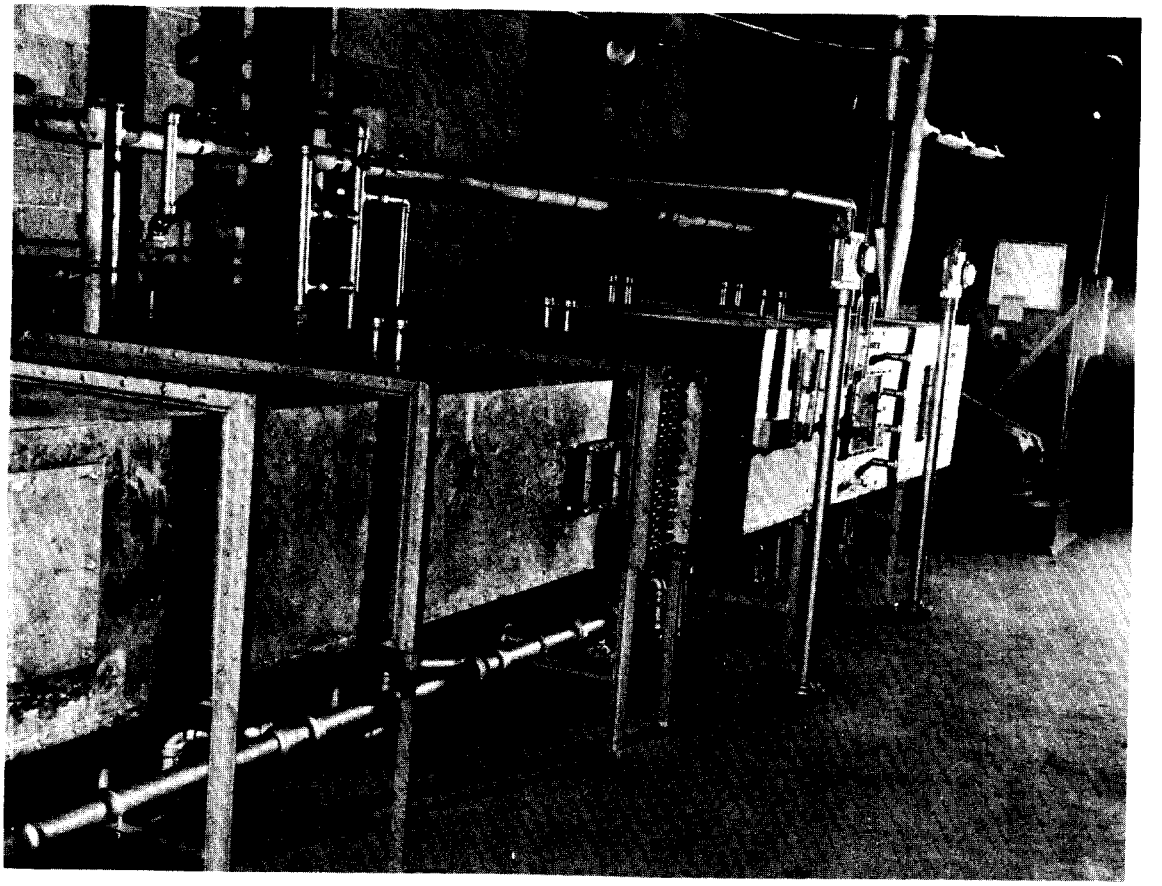

FIGURE 10

HUMIDITY TEST UNIT - UNINSULATED
DOWNSTREAM OF AIR INTAKE END

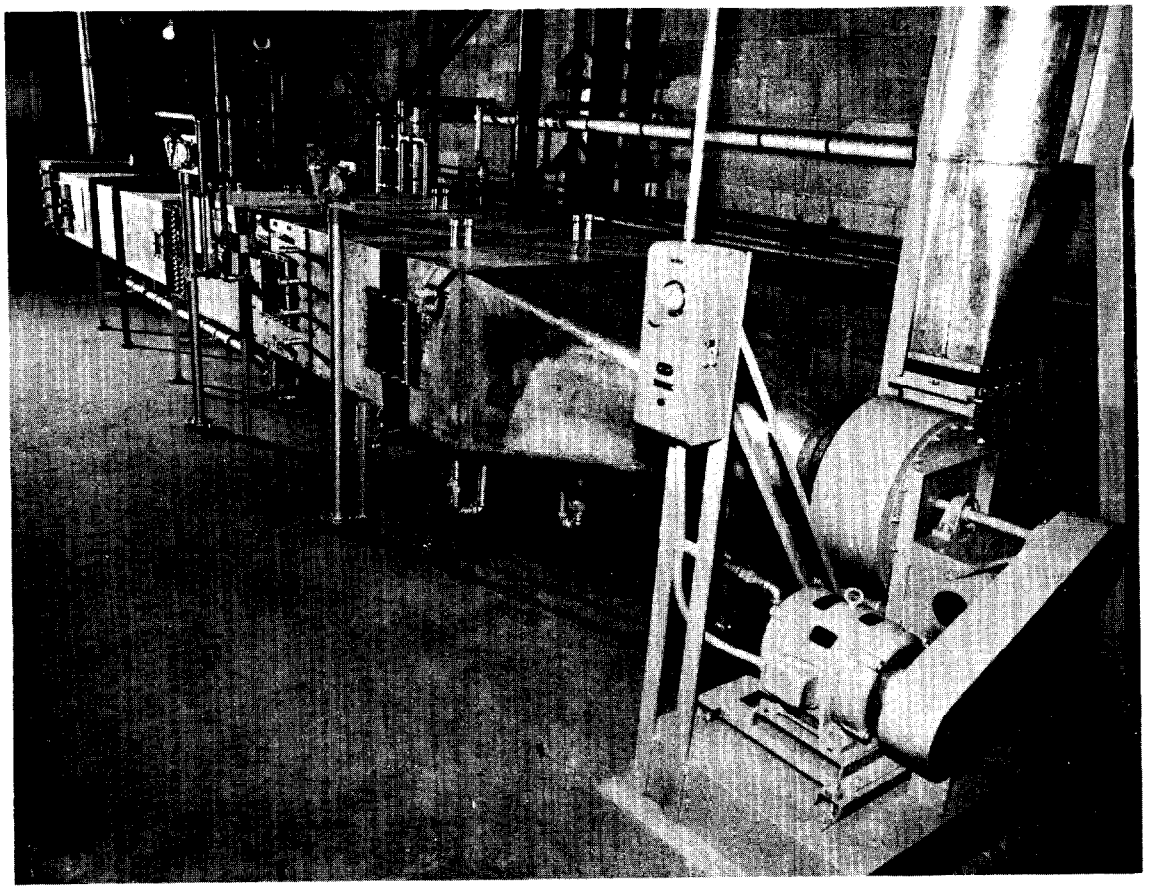

FIGURE 11

HUMIDITY TEST UNIT - UNINSULATED
EXHAUST END

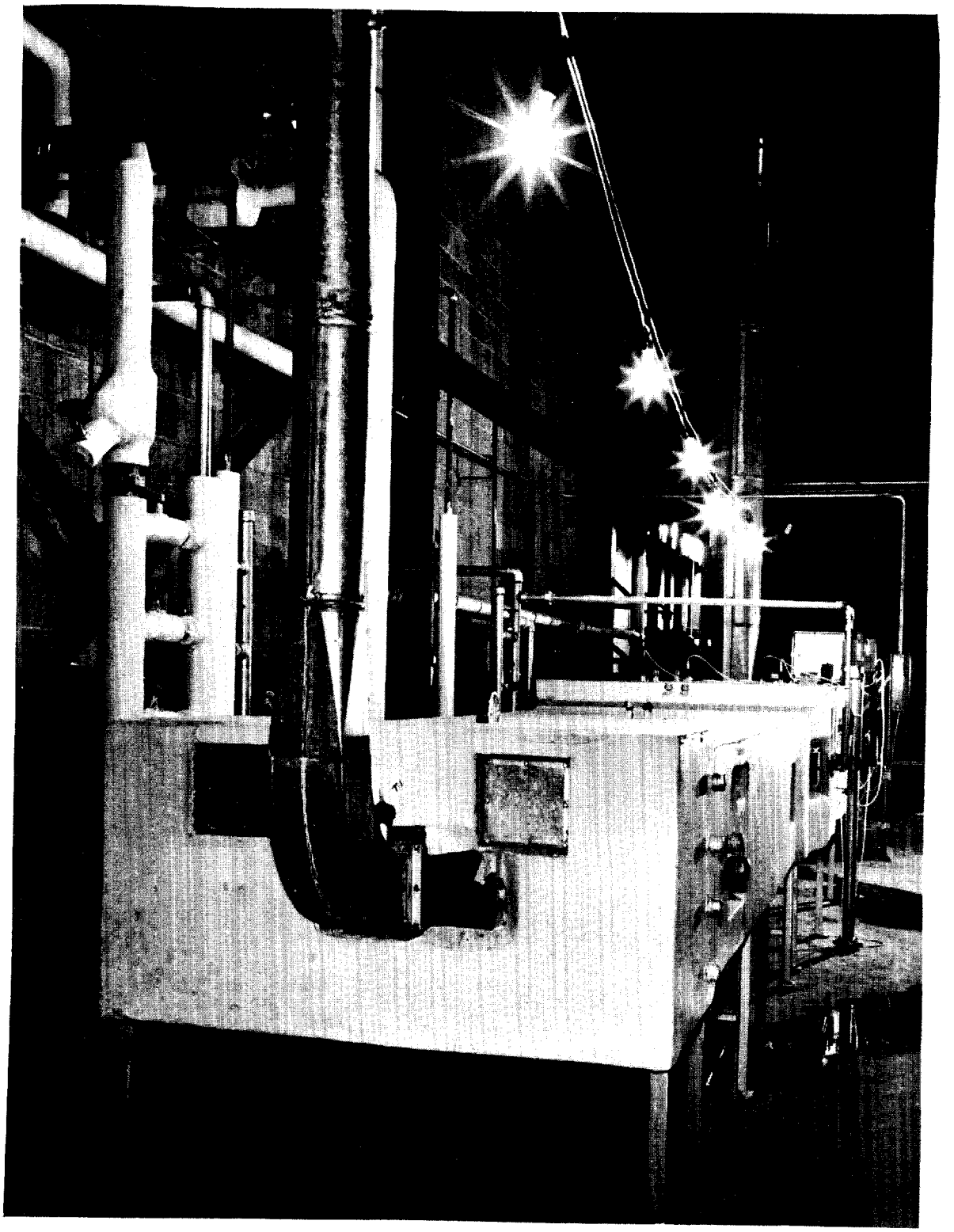

FIGURE 12

HUMIDITY TEST UNIT - INSULATED
AIR INTAKE END

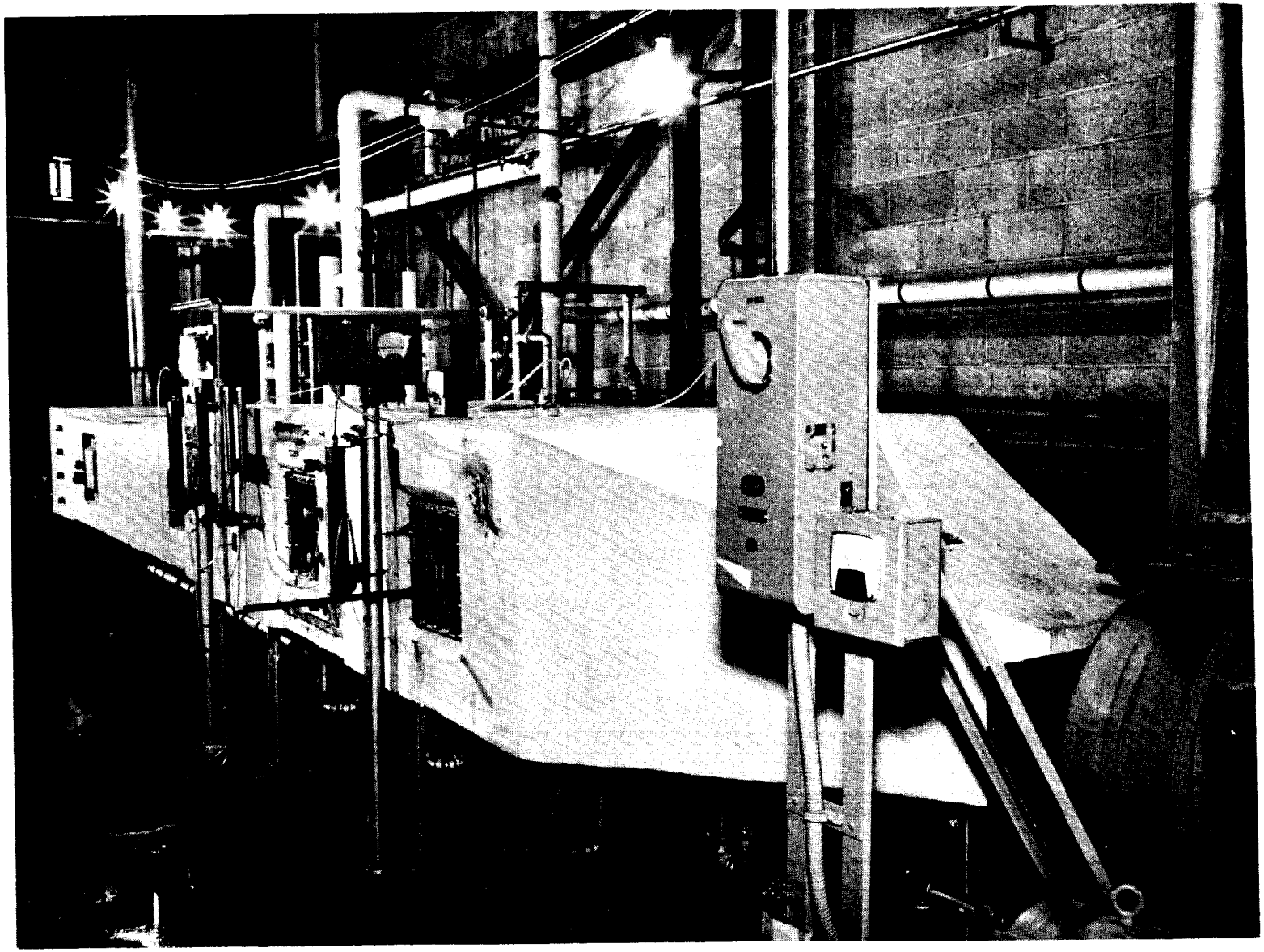

FIGURE 13

HUMIDITY TEST UNIT - INSULATED
EXHAUST END

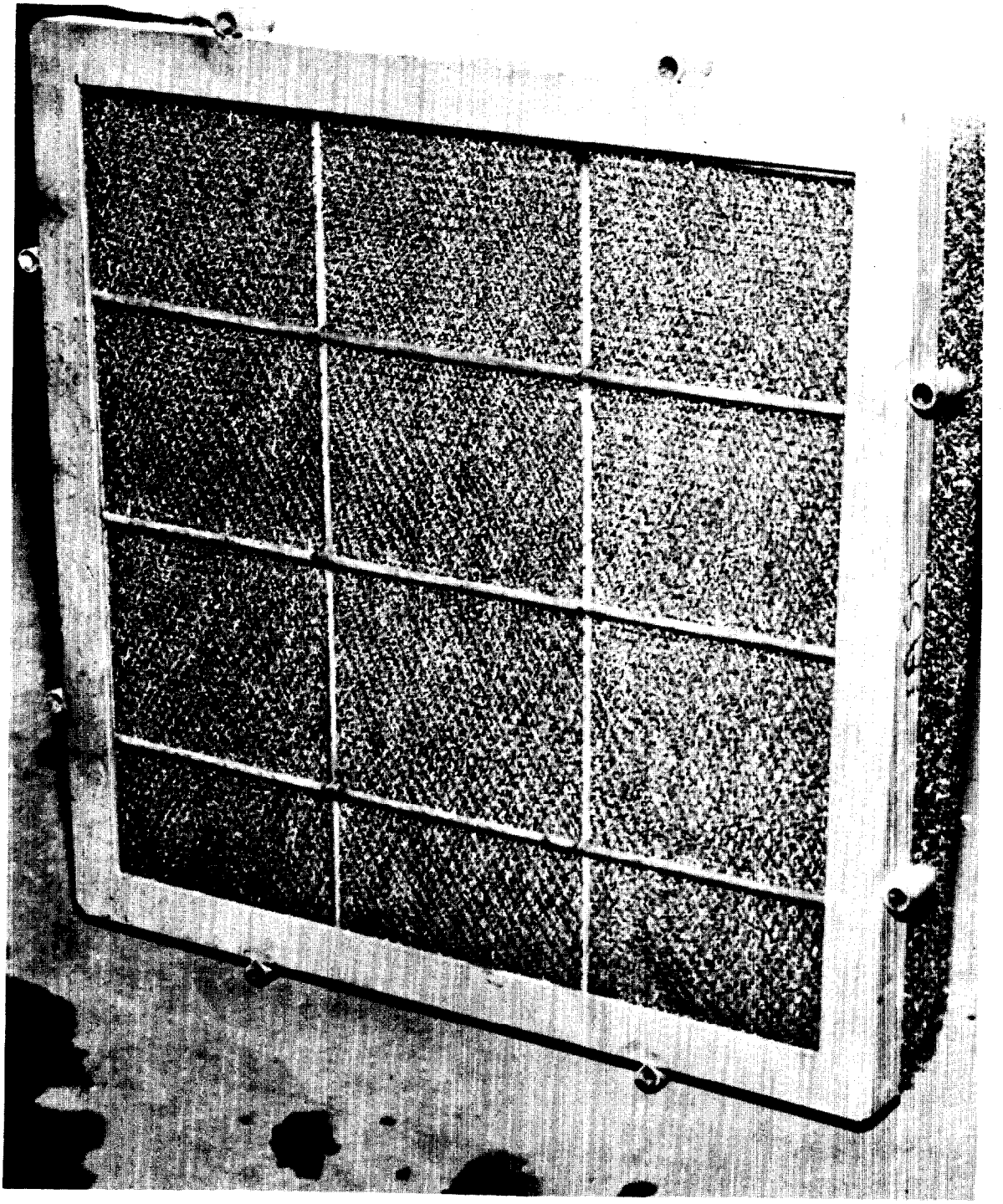

FIGURE 14

MOISTURE SEPARATOR

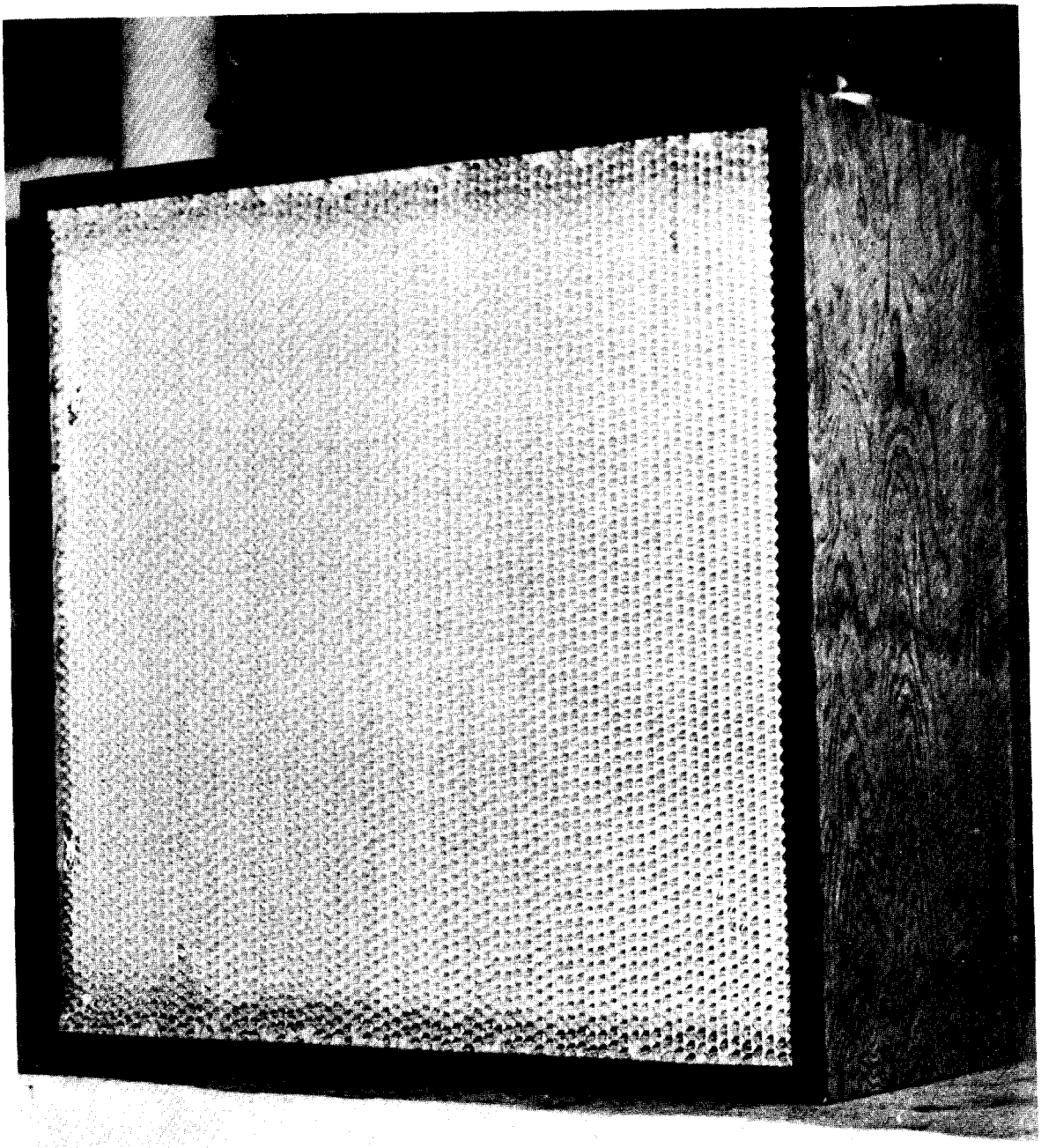

FIGURE 15

HIGH-EFFICIENCY FILTER

AIR FLOW PERFORMANCE IN FUME HOOD EXHAUST SYSTEMS IN CENTRAL RESEARCH AND ADMINISTRATION BUILDING 4500-SOUTH, ORNL

R. H. Forde
Oak Ridge National Laboratory

INTRODUCTION

During the execution of the balance of air-handling systems in Building 4500-South, it became apparent that there were fume leakage problems resulting from the present operation of fume hoods. A series of performance tests was conducted to determine causes and possible corrections.

DISCUSSION OF HOOD TESTS

The purpose of the first air flow performance tests was to determine the cause of fumes flowing out of the fume hoods and back into the laboratories via the bypass grille. The "test" hood, located in Laboratory E-49, was manufactured by Metalab Equipment Company of Hicksville, Long Island, New York, and is similar to Metalab's H-200 Series, Flo Line Fume Hood (Sketch No. 1). All of the fume hoods in Building 4500-South resemble this type.

The leakage out of the bypass grille was emitted through a crack between the upper sash frame and the light box assembly (Sketch No. 2). The crack is 1 3/4 inches wide and for a nominal 8-foot hood, 82 inches long. This represents an opening of 1 square foot area.

The upper baffle damper was adjusted wide open, and the lower baffle damper was adjusted to a 1-inch maximum opening. After adjustment, smoke from a one-half-minute smoke bomb set off inside the hood did not flow through the crack when the hood sash was at 15-inch and 30-inch openings.

Heat sources were then placed inside the hood. No leakage was observed when two 1.2-kw electric hot plates were operated at maximum heat. When two blast burners (Sketch No. 3) were ignited in the hood, smoke from a bomb flowed out of the bypass grille into the laboratory.

Measurements taken before the heat sources were added indicated an air flow into the hood through the crack. This air flow velocity was approximately equal to that of the hood face velocity. Measurements taken after the heat sources were added indicated an increase in hood face velocity and an air flow of higher velocity out of the hood through the crack.

It was concluded that the convection currents induced by the heat inside the hoods were the basic cause of the disturbance in flow pattern. The heat also expanded the air in the upper part of the hood. These conditions produce a

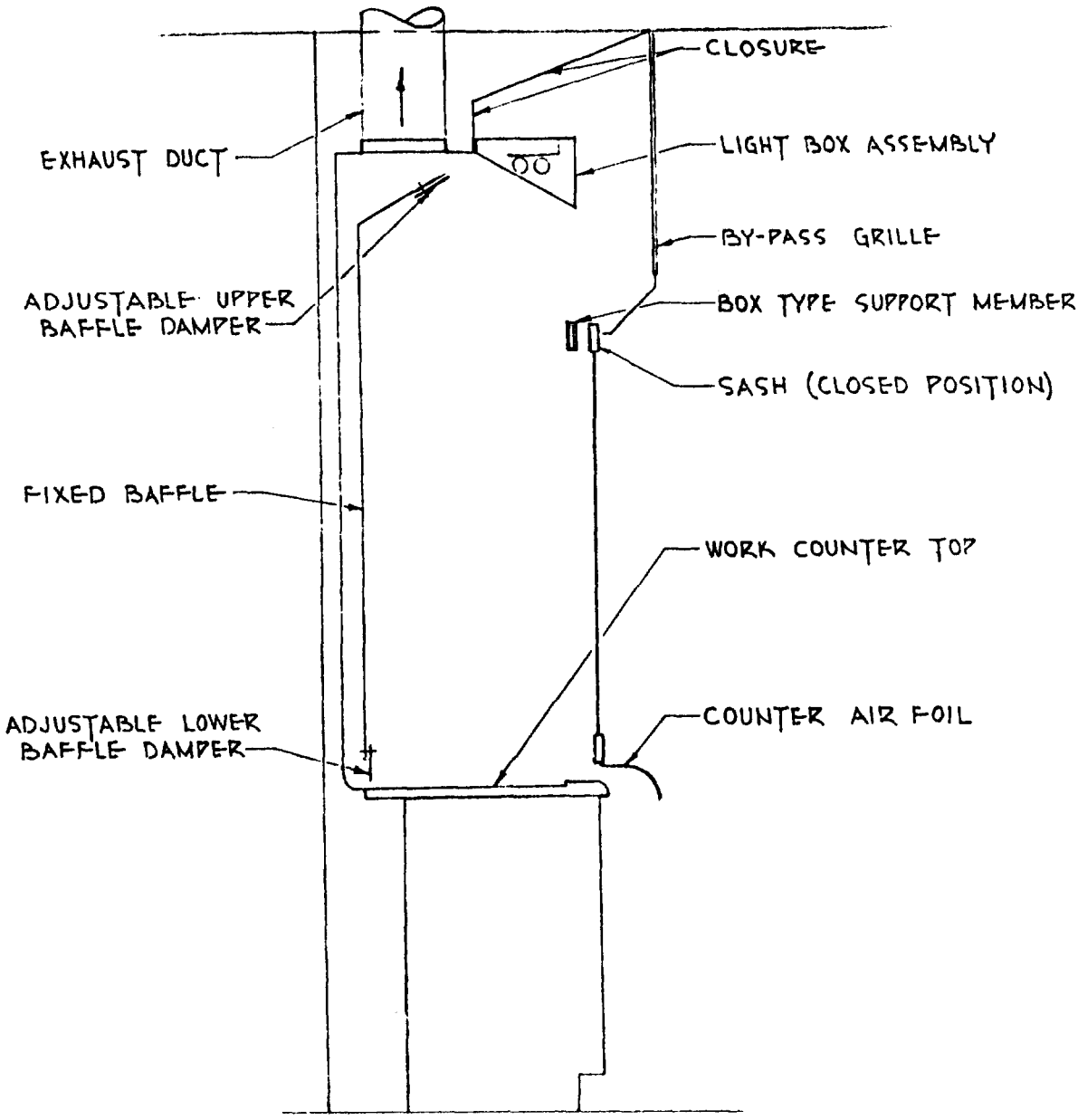

HOOD CROSS-SECTION

METALAB EQUIPMENT CO.

NO SCALE

SKETCH NO. 1

AIR HANDLING REVISIONS
BLDG 4500 SOUTH
WR A-06455-11D
R.H. FORDE—D.L. ANFINSON

8-62

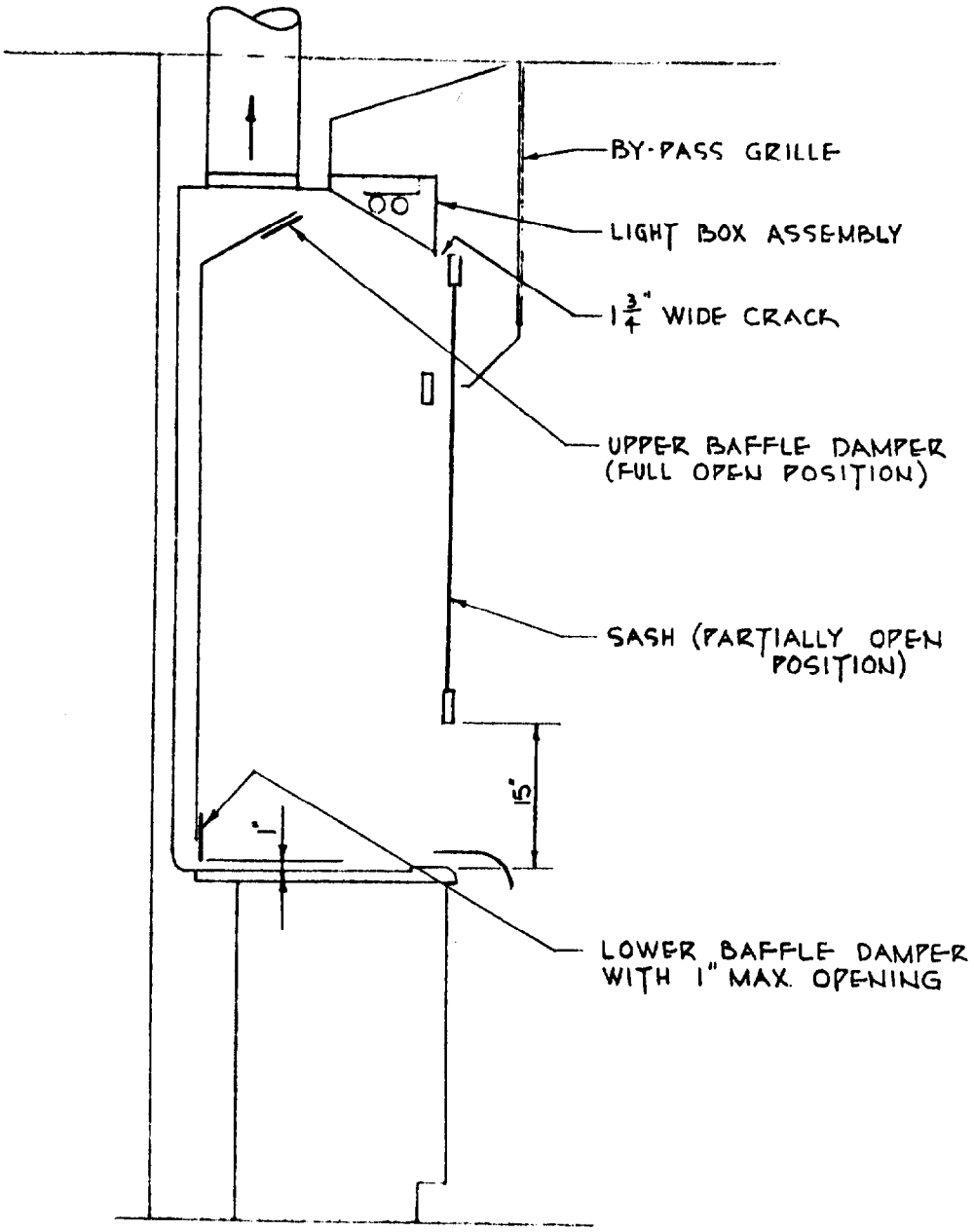

HOOD CROSS-SECTION

NO SCALE

SKETCH NO. 2

AIR HANDLING REVISIONS
BLDG 4500 SOUTH
W.R. A-06455-11D
R. H. FORDE – D.L. ANFINSON

8-62

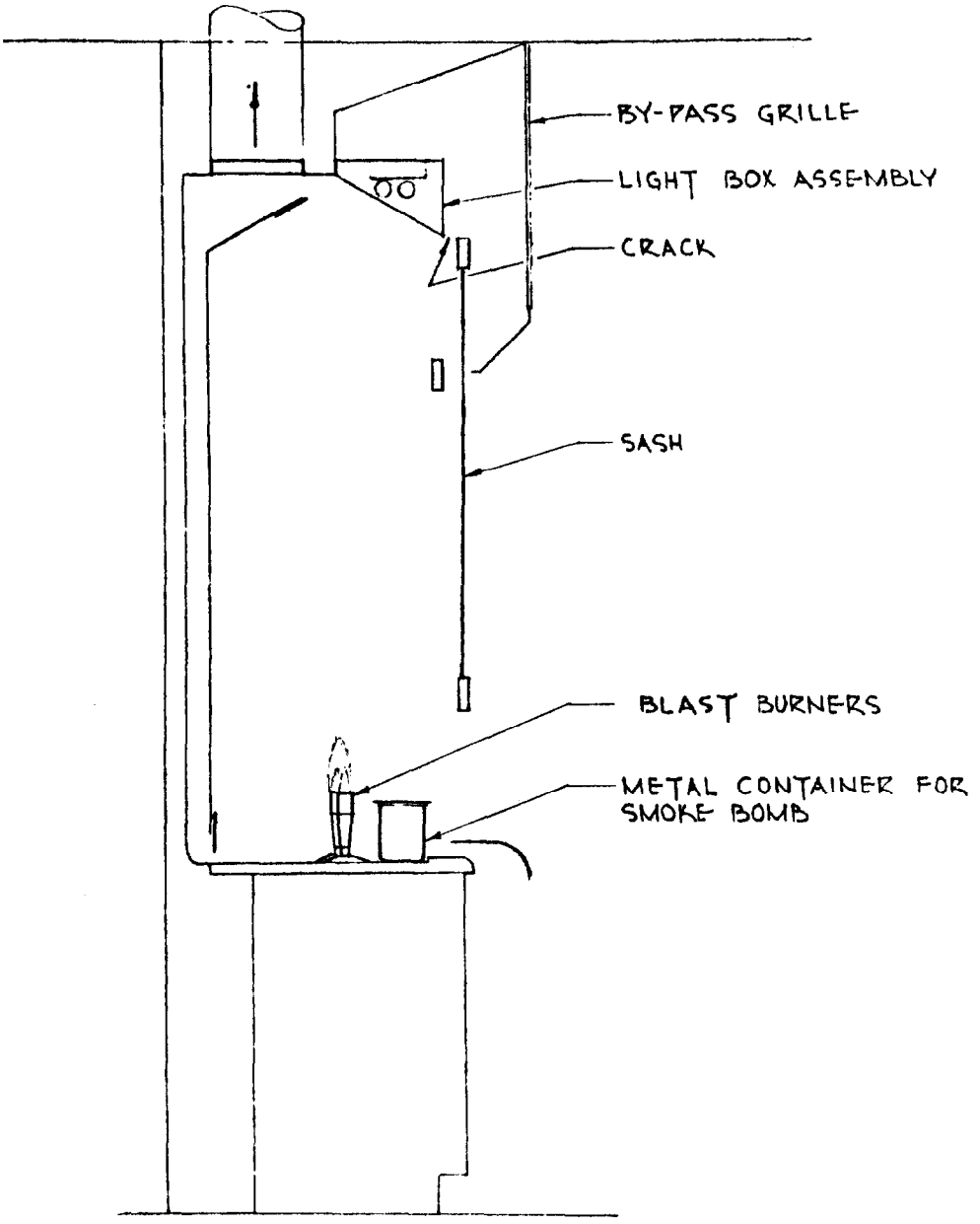

HOOD CROSS-SECTION

NO SCALE

SKETCH NO. 3

AIR HANDLING REVISIONS
BLDG 4500 SOUTH
W.R. A-06455-11 D
R. H. FORDE - D.L. ANFINSON

greater volume of air than the upper baffle opening could exhaust. An air pressure build-up resulted. The crack acting as a pressure relief port provided the route for the fume leakage out the hood bypass grille.

An additional series of tests was performed to determine the fume leakage boundary at various heat loads and air quantities. These tests are described later in this report.

HOOD MODIFICATIONS

Various types of panels were installed to deflect the air flow inside the hood and to contain the air at the increased pressure resulting from internal heat sources. As a temporary measure they were all constructed of blotting paper.

A support space deflection panel (Sketch No. 4) was installed. The blast burners were turned on, and a bomb produced smoke that flowed out of the hood through the space between the panel and the sash.

An angle panel was attached to the hood support member with the support space deflection panel remaining in position (Sketch No. 5). Smoke leakage was observed when the burners were in operation.

The disadvantage of the above two types of panels is that the bypass air path is closed. This causes undesirable high velocities across the work counter top at a low sash position.

A third installation proved to be more successful. A panel was installed to totally block the bypass grille (Sketch No. 6). This panel did stop the outflow of smoke; however, it proved to have the same disadvantage as the first two panels--the function of the bypass is lost. The panel could be used as a temporary measure, providing the sash remained open; moreover, such modifications would mean some sash opening is mandatory at all times, which would negate the advantage of having the sash between work and worker.

A scraper-type panel was installed to block the crack (Sketch No. 7). Leakage was observed only where the end of the panel did not close against the side lining of the hood. A permanent panel constructed of a metal strip edged with neoprene on three sides, similar to a windshield wiper blade, would decrease the leakage. An added advantage of this panel was the increase of hood face velocity without a total flow increase. Further tests were conducted with metal and neoprene scraper-type panel at various air temperatures and hood face air velocity steps. Test procedure and detailed discussion are presented later in this report.

Excessive air turbulence was noticed near the lower corners of the fume hood face. A stream of air flowed out the opening in the face panel underneath the counter airfoil (Sketch No. 9). The fume hood exhaust fan pulls the air from the pipe chases. It flows through the space between the fume hood lining and side panels and out the face panel opening. The reversal of the air flowing out of this opening and into the face of the hood caused turbulence at the face.

Two closure plates (Sketch No. 10), one at each lower corner of the hood face, were used to block this air stream and stop the air turbulence.

A safety shield (Sketch No. 8) is another feature suitable to increase face velocity without increasing the exhaust air quantity. It consists of a panel that slides horizontally in front of the vertically moving sash. The safety shield blocks part of the face area and causes increased air velocity through

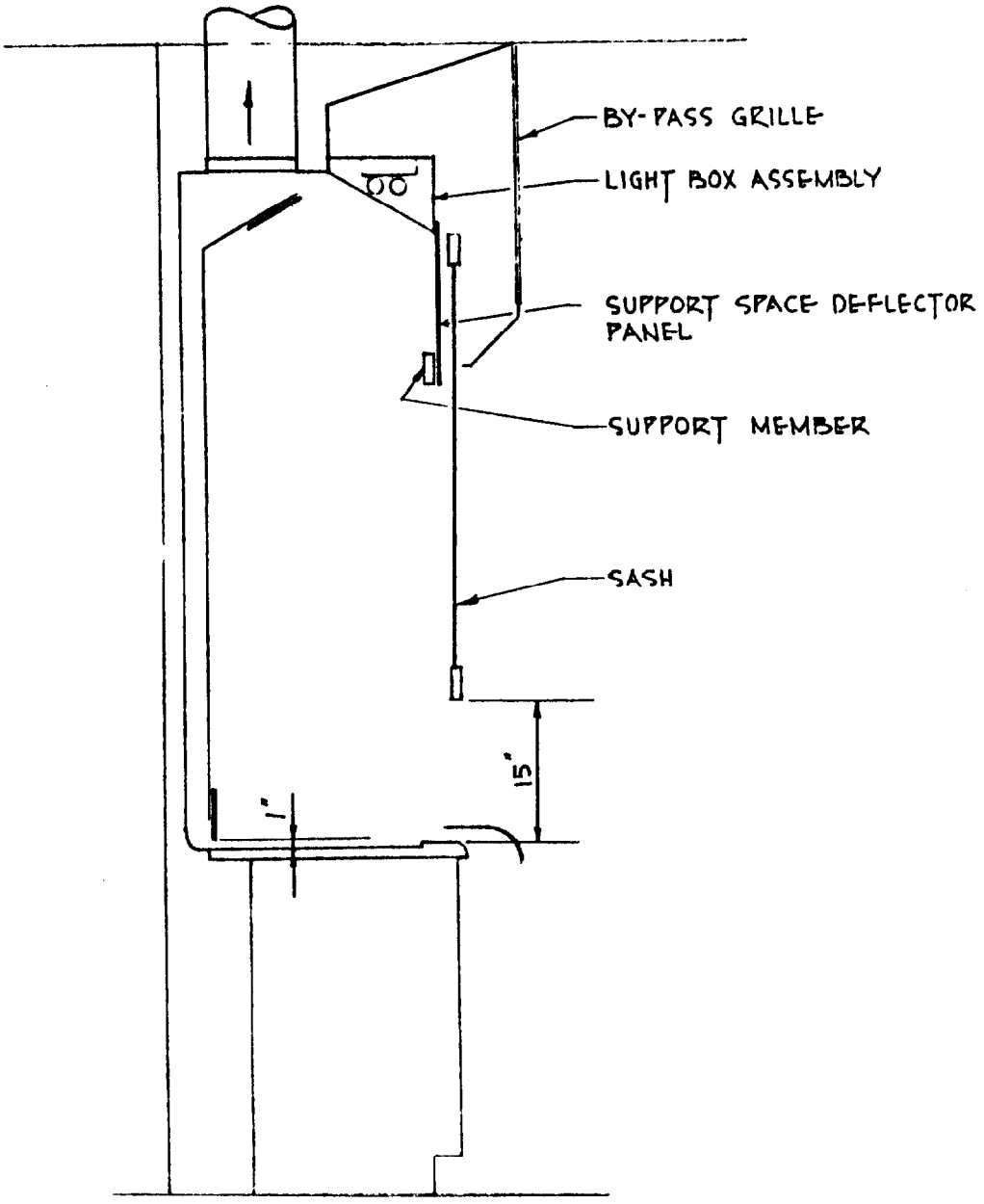

HOOD CROSS-SECTION

SHOWING SUPPORT SPACE DEFLECTOR PANEL

NO SCALE

SKETCH NO. 4

AIR HANDLING REVISIONS
BLDG 4500 SOUTH
W.R. A-06455-11 D
R. H. FORDE — D. L. ANFINSON

8-62

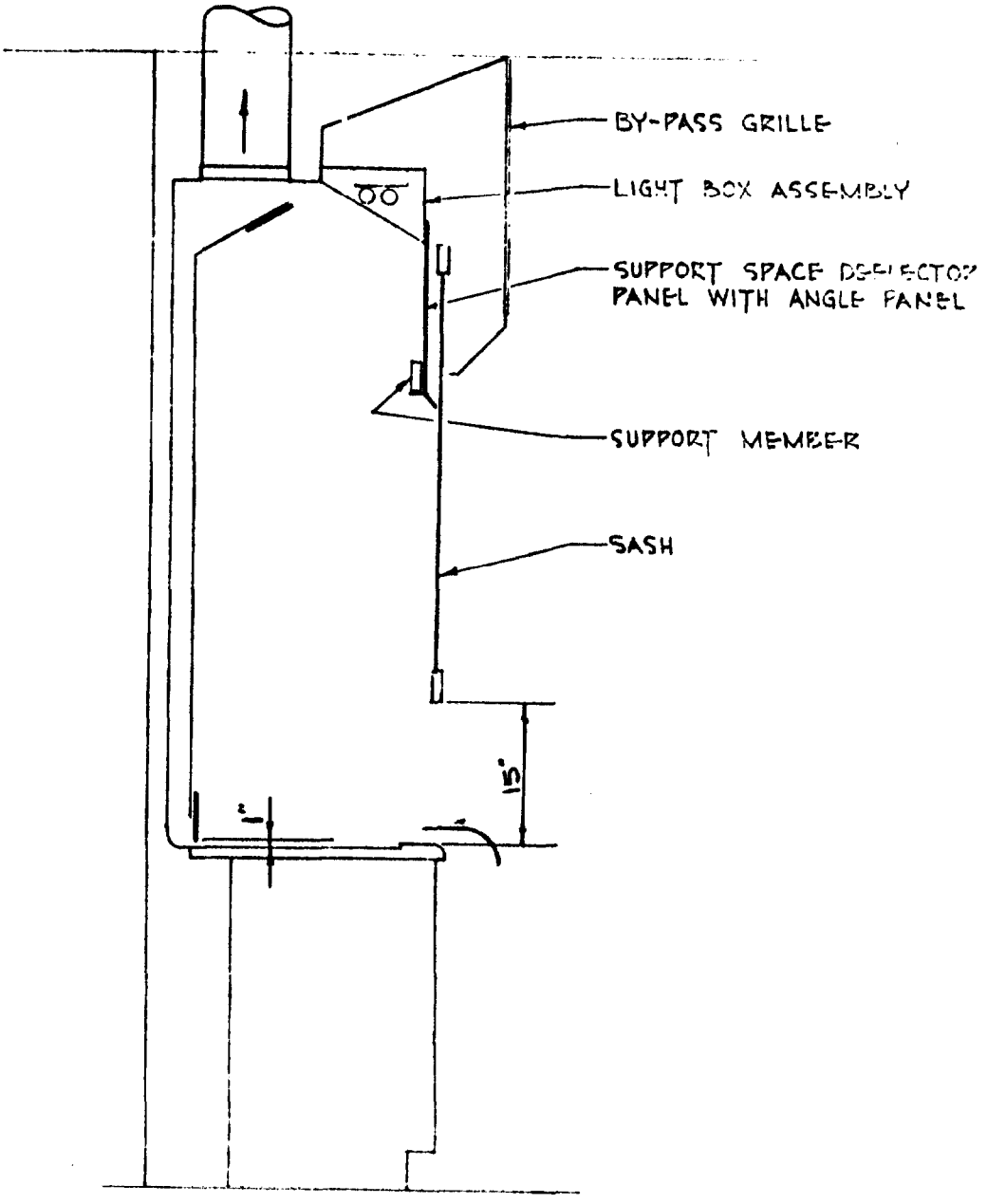

HOOD CROSS-SECTION

SHOWING SUPPORT SPACE DEFLECTOR PANEL WITH ANGLE ADDITION

NO SCALE

SKETCH NO. 5
AIR HANDLING REVISIONS
BLDG 4500 SOUTH
WR A-06455-11D
R.H. FORDE - D.L. ANFINSON

8-62

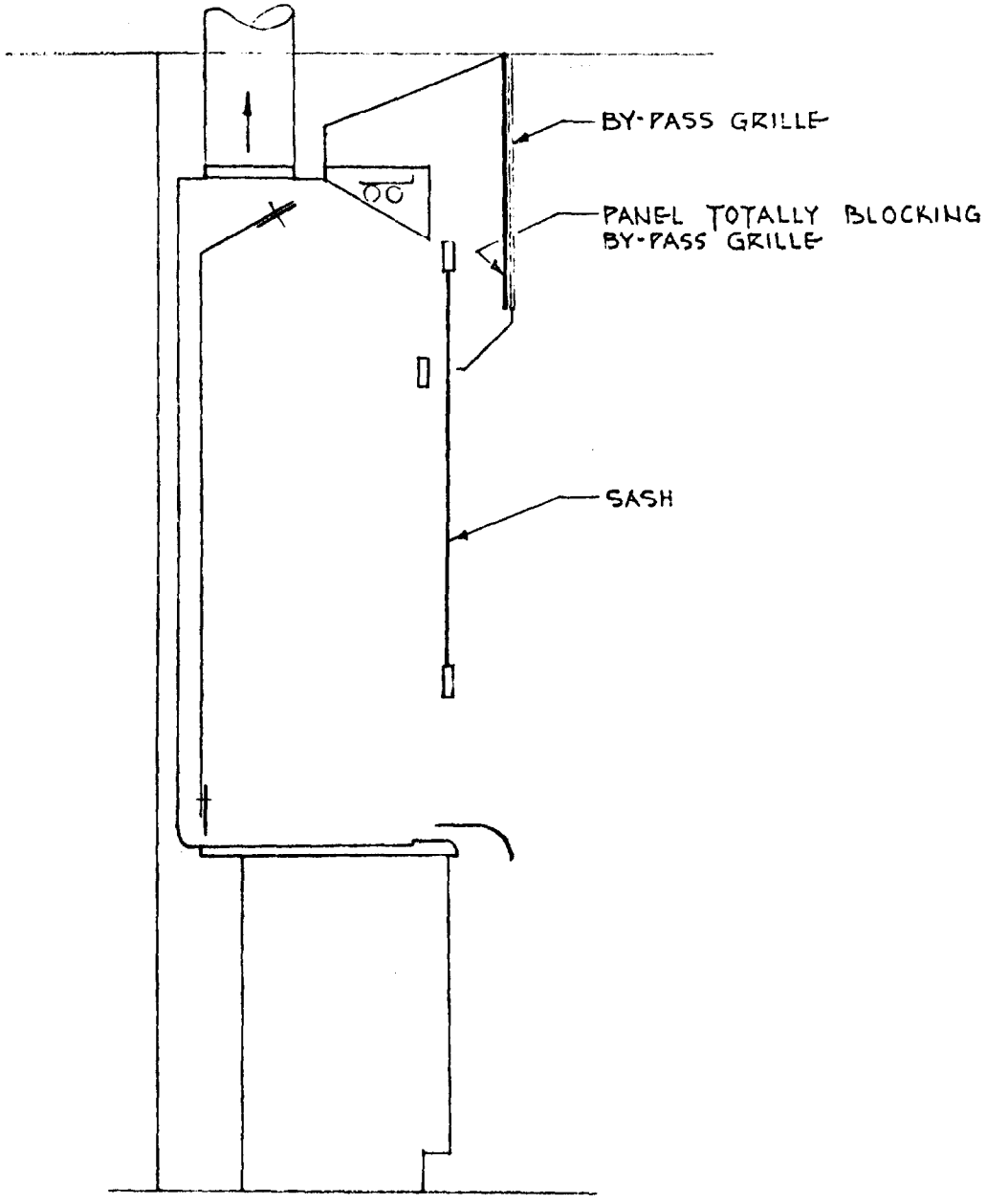

HOOD CROSS-SECTION

SHOWING PANEL TOTALLY BLOCKING THE BY-PASS GRILLE

NO SCALE

SKETCH NO. 6

AIR HANDLING REVISIONS
BLDG 4500 SOUTH
WR. A-06455-11D
R.H. FORDE - D.L. ANFINSON

8-62

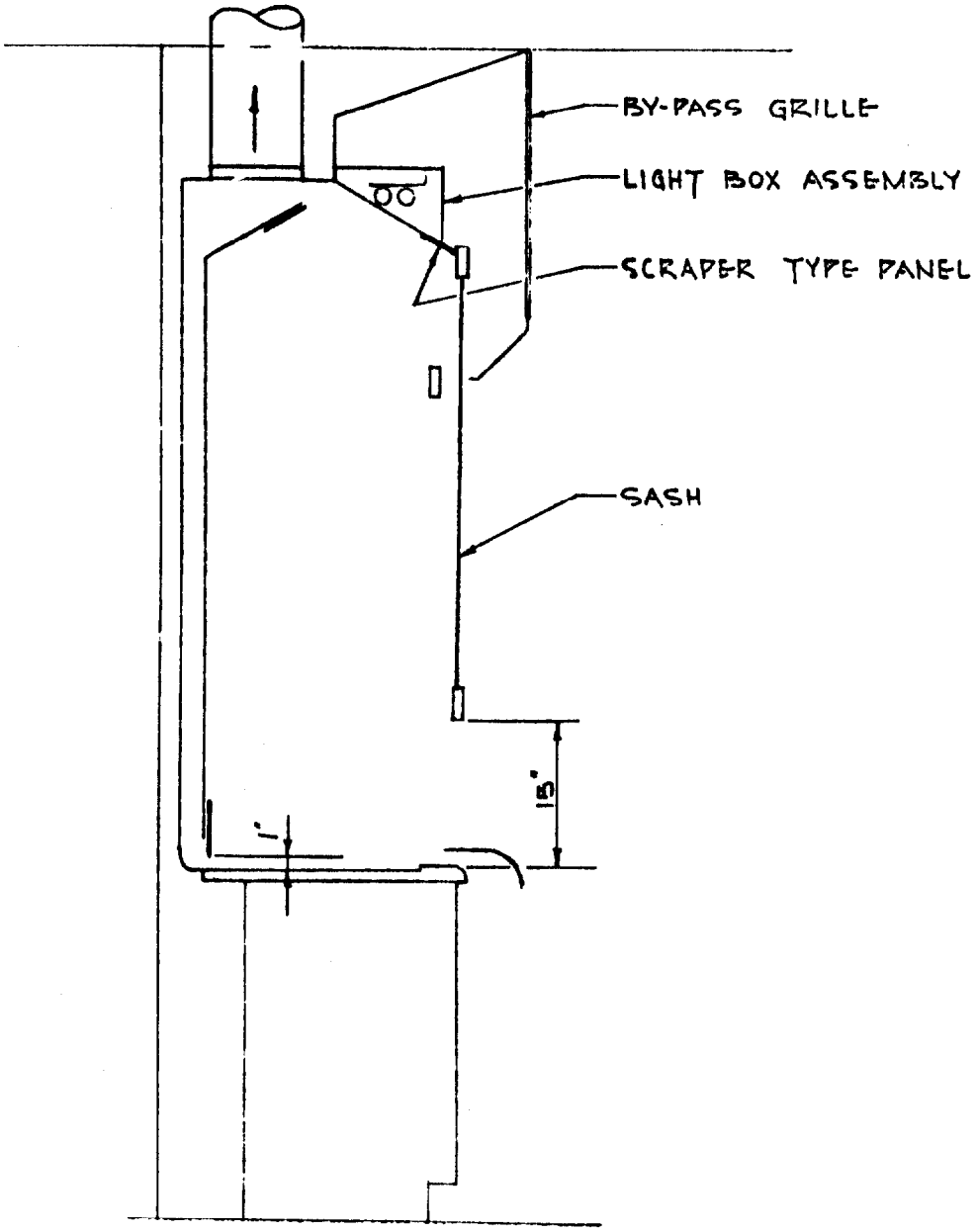

HOOD CROSS-SECTION
SHOWING SCRAPER TYPE PANEL

NO SCALE

SKETCH NO. 7
AIR HANDLING REVISIONS
BLDG 4500 SOUTH
WR A-06455-11D
R.H. FORDE - DL. ANFINSON

8-62

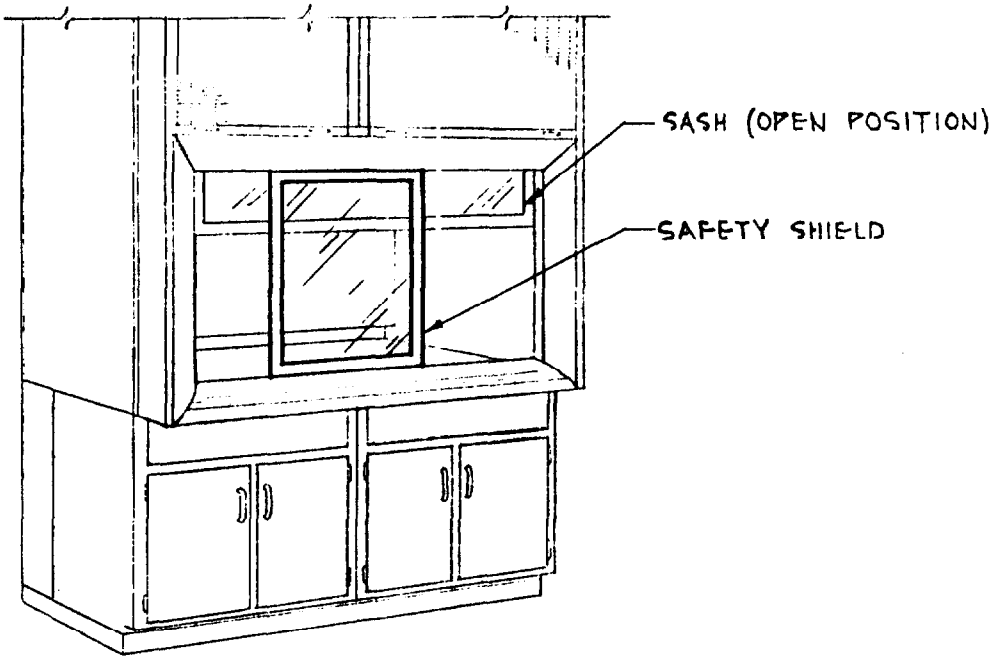

FUME HOOD WITH SAFETY SHIELD

NO SCALE

SKETCH NO. 8
AIR HANDLING REVISIONS
BLDG 4500 SOUTH
WR A-06455-11D
R. H. FORDE - D.L. ANFINSON

8-62

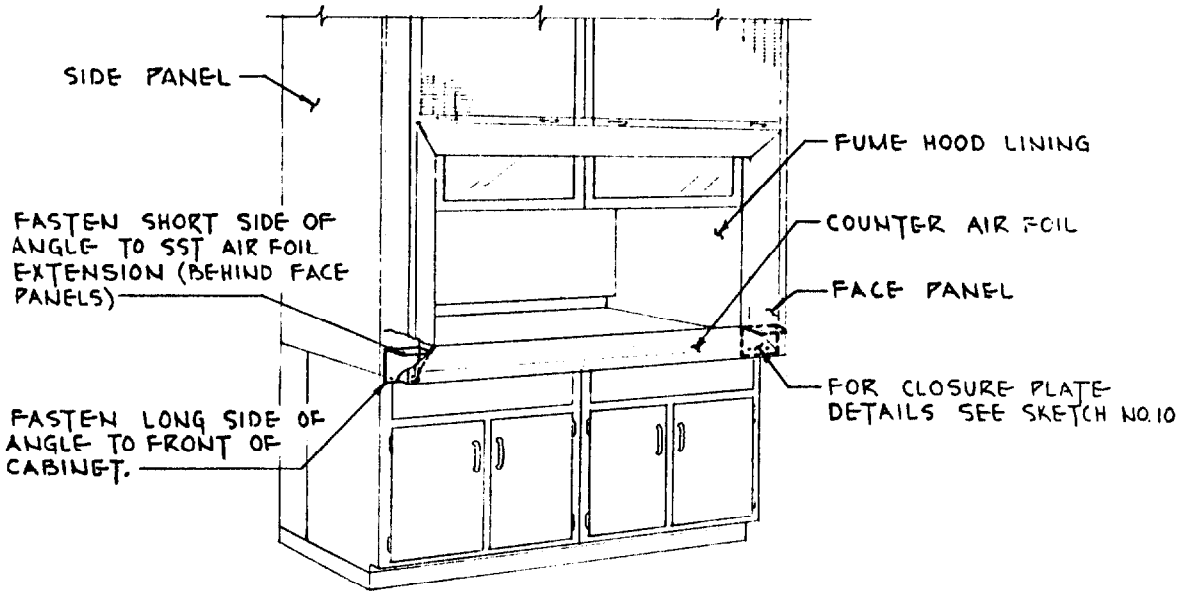

TYPICAL LOCATION OF HOOD FACE PANEL CLOSURE PLATES

NO SCALE

NOTES:

1. FASTEN CLOSURE PLATES TO HOOD WITH NO. 8, TYPE "A" SST SM SCREWS
2. CUT SLOTS IN SIDES OF CLOSURE PLATES WHERE COUNTER TOP INTERFERES WITH INSTALLATION. ALLOW MIN. CLEARANCE PROVIDING CLOSE FIT.
3. FIELD CHECK BEFORE DRILLING HOLES FOR ELECTRICAL CONDUIT, CABLE, OR JUNCTION BOXES HIDDEN BEHIND PANELS TO BE DRILLED.
4. AFTER INSTALLATION, CAULK CRACKS AROUND CLOSURE WITH AMERCOAT NO. 1043 SOFT PUTTY.

SKETCH NO. 9
AIR HANDLING REVISIONS
BLDG 4500 SOUTH
W.R. A-06455-11D
R.H. FORDE - D.L. ANFINSEN

8-62

NOTES

1. FABRICATE FROM 26 GA SST SHEET, TYPE 347.
2. REMOVE ALL BURRS & SHARP EDGES.
3. MODIFY IN FIELD AS REQUIRED TO FIT INTENDED LOCATION.
4. FOR INSTALLATION LOCATION SEE SKETCH NO. 9

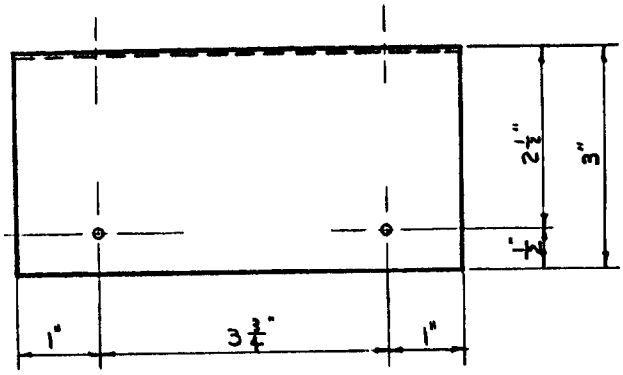

TOP VIEW

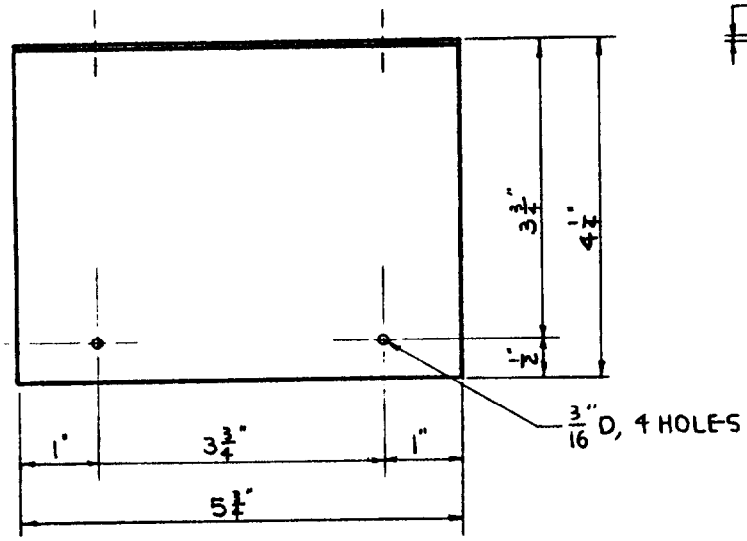

FRONT VIEW

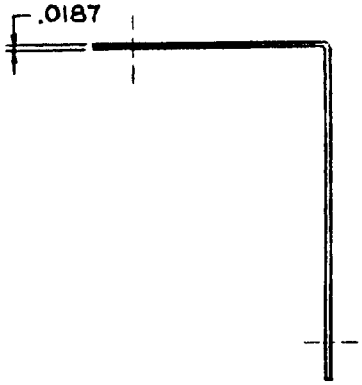

SIDE VIEW

CLOSURE PLATES FOR HOOD FACE PANELS

NO SCALE

SKETCH NO. 10
AIR HANDLING REVISIONS
BLDG 4500 SOUTH
W.R. A-06455-11D
R. H. FORDE – D. L. ANFINSON

the remainder of the opening. Naturally, the effectiveness of the safety shield is minimized when the bypass is open.

MAINTENANCE OF HOOD SYSTEMS

Routine maintenance of hood systems is required to assure designated hood face velocity; its maintenance involves attic filter fan operations, as well as laboratory air flow patterns. Both of these activities must be well coordinated to obtain optimum results.

It is characteristic of exhaust fans used for the fume hoods of Building 4500-South to handle a specific volume of air when at a constant speed and a set static pressure. The static pressure of an exhaust system with filtration increases as the filter loads with dirt. This increased static pressure or resistance reduces the air flow quantity unless compensations are made.

A damper is located in the filter box in order to adjust the static pressure (Sketch No. 11). When the filter is clean, the damper is partially closed to offer the resistance that dirt loading would produce. As the filter dirt load increases, the damper is opened to restore the original value of static pressure across the fan. This adjustment restores the air flow to the quantity necessary for the designated fume hood face velocity.

When the damper is fully open and the original set point of static pressure has been exceeded, the filter dirt loading causes excessive resistance. At this point the filter must be renewed to maintain designated hood face velocities. If the pressure is below the original set point at any time, the filter probably has ruptured and renewal is necessary.

Control of the air volume with the existing adjustable damper can be routinely maintained if a static pressure indicator is installed to indicate pressure created by the exhaust.

The purpose of the pressure-electric warning system is to send a signal to an alarm when an exhaust fan malfunctions. The alarm consists of a bell, horn, and red lights located in the operator's compartment in the basement of Building 4500-North. Additional red lights, one for each exhaust fan, are located in the attic of Building 4500-South.

THE EFFECT OF HEAT ON HOOD AIR FLOW

The purpose of this series of tests was to resolve how heated fumes can be contained safely in a fume hood and an exhaust system. Tests were conducted to determine the hood and ductwork modifications necessary to increase face velocity and prevent leakage of heated fumes while the hood utilizes a minimum air quantity.

Procedure

Equipment used was:

1. Fume hood - Metalab Equipment Company, Series H-200, 8-foot fume hood complete with services and exhaust system.

2. Centigrade pyrometer with four thermocouple leads of chromel-alumel (ext. res. 75 ohms); Assembly Products, Inc., SIM-PLY-TROL.

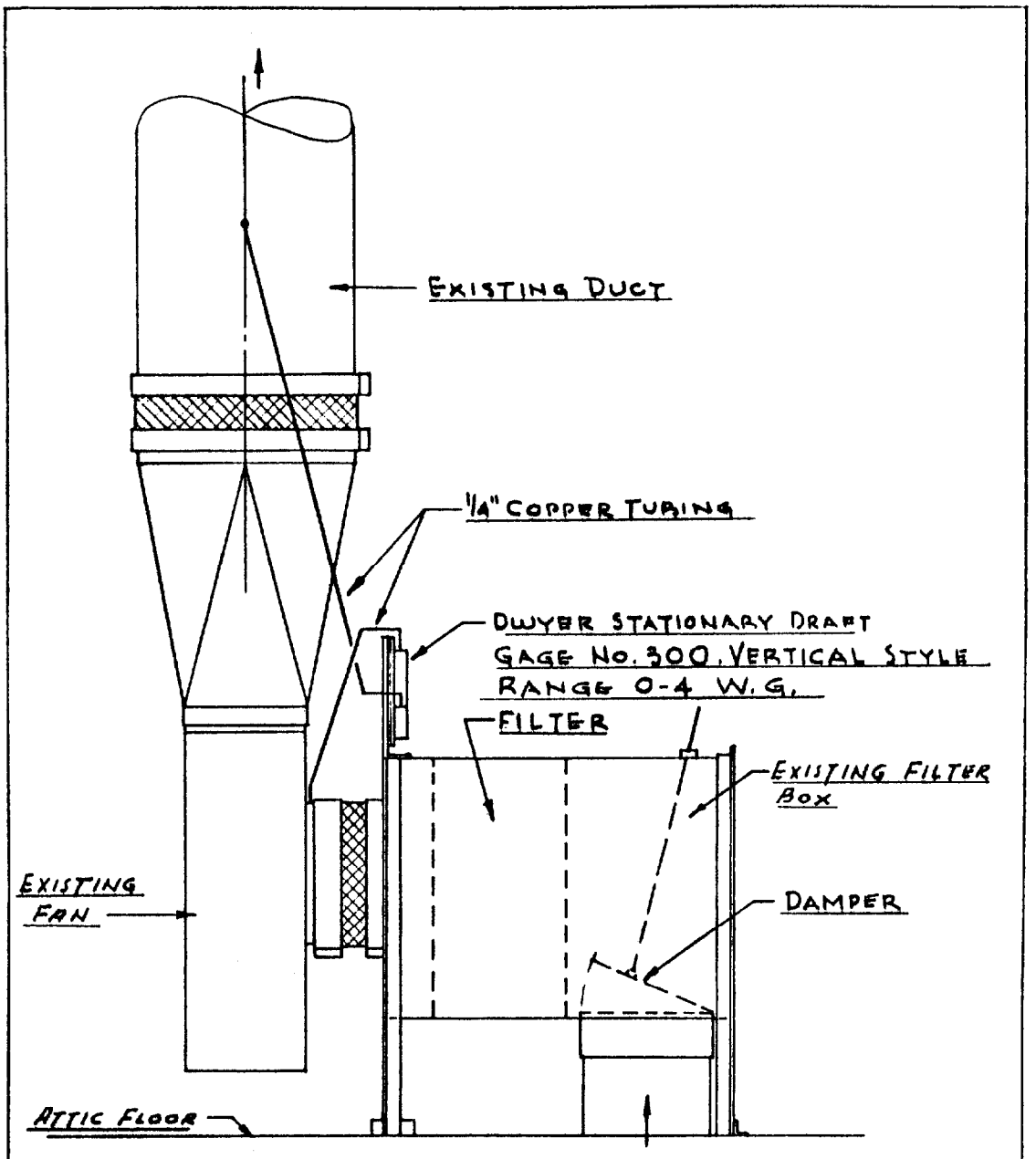

ELEVATION OF TYPICAL EXHAUST FAN

SKETCH NO. 11
AIR HANDLING REVISIONS
BLDG 4500 SOUTH
W.B. A-06455-11D
R.H. FORDE - J.D. CLAPP

9-62

3. Anemotherm air meter, Anemostat Corporation, Model 60.

4. Blast burners (2) complete with air and gas tubing connections, Fisher Scientific Company.

5. Smoke bombs - one minute white smoke - E. Vernon Hill & Company.

6. Container - open top, SST.

7. Centigrade thermometer.

8. Manometer - 0 to 3 inches of water scale with connecting tubing.

9. Magnehelic gage - 0 to 6 inches of water scale with connecting tubing. F. W. Dwyer Company.

10. Intercommunication system and wiring - battery-powered Monarch transistorized interphone.

11. Tachoscope - James G. Biddle Company.

12. Air pressure gage and orifice coupling.

13. Scraper-type panels.

Data recorded were:

1. Speed of fan (rpm).

2. Static pressure across fan (inches water gage).

3. Hood face velocity (fpm) of air at 15 inches or 25 inches.

4. Room temperature in degrees centigrade (°C).

5. Initial temperature inside hood at four thermocouple positions.

6. Natural gas pressure - inches of water.

7. Compressed air pressure - pounds per square inch (psi).

8. Temperature inside hood at the four thermocouple positions with heat added.

9. Visibility of smoke staying in hood or leaking out of hood.

Methods used were:

The exhaust fan serving the fume hood was set by adjusting the filter box damper to the desired air quantity. The air quantity was determined from hood face velocity readings measured with an anemotherm air meter. A nine-point traverse with the anemotherm consisted of three vertical readings at three points across the hood face.

Temperature in the room and at the four thermocouple points inside the hood were recorded. The four points, as shown in Sketch 12 and Sketch 13, were:

Point 1, right exhaust outlet of hood.
Point 2, left exhaust outlet of hood.
Point 3, center of hood in crack between light box assembly and sash.
Point 4, below point 3, 10 inches, and 6 inches into hood interior.

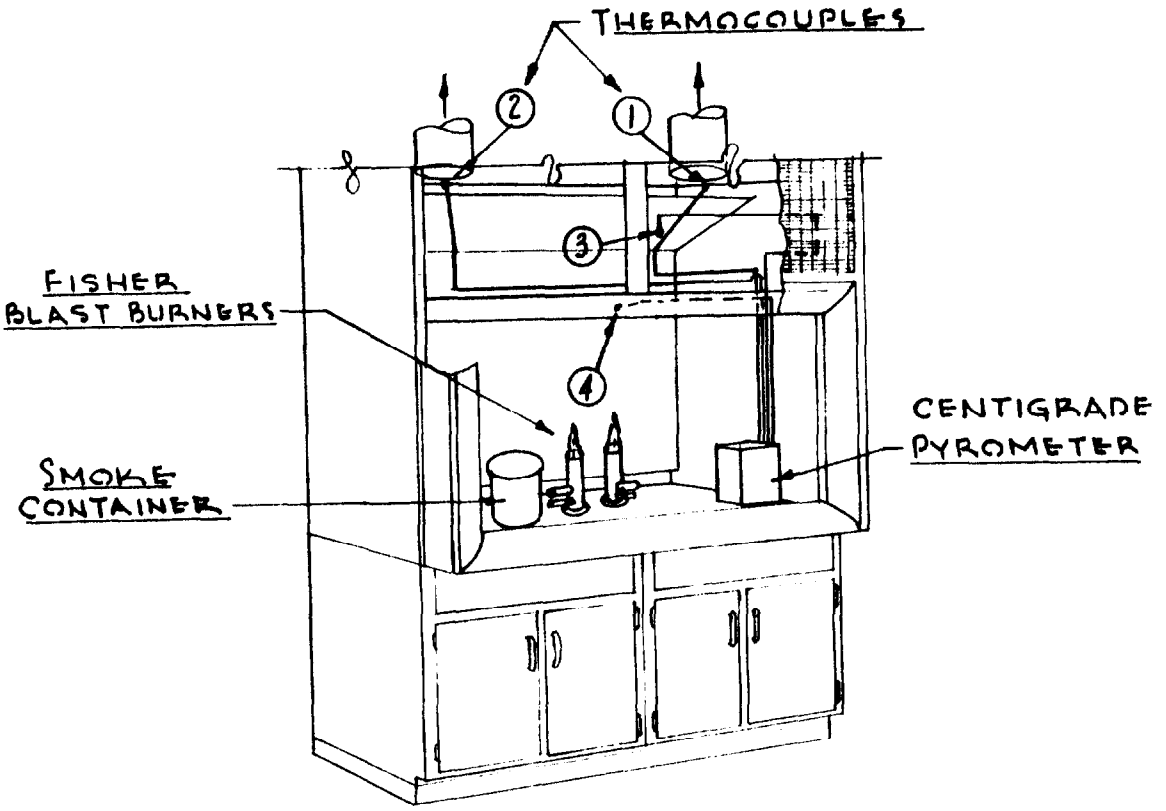

FRONT VIEW OF HOOD
SHOWING EQUIPMENT
NOT TO SCALE

METALAB EQUIP CO, H200 SERIES, 8 FT. FUME HOOD

SKETCH No. 12
HOOD AIR-FLOW STUDY
BLDG 4500 SOUTH
WR A-06926-11D
R. H. FORDE - J.D. CLAPP

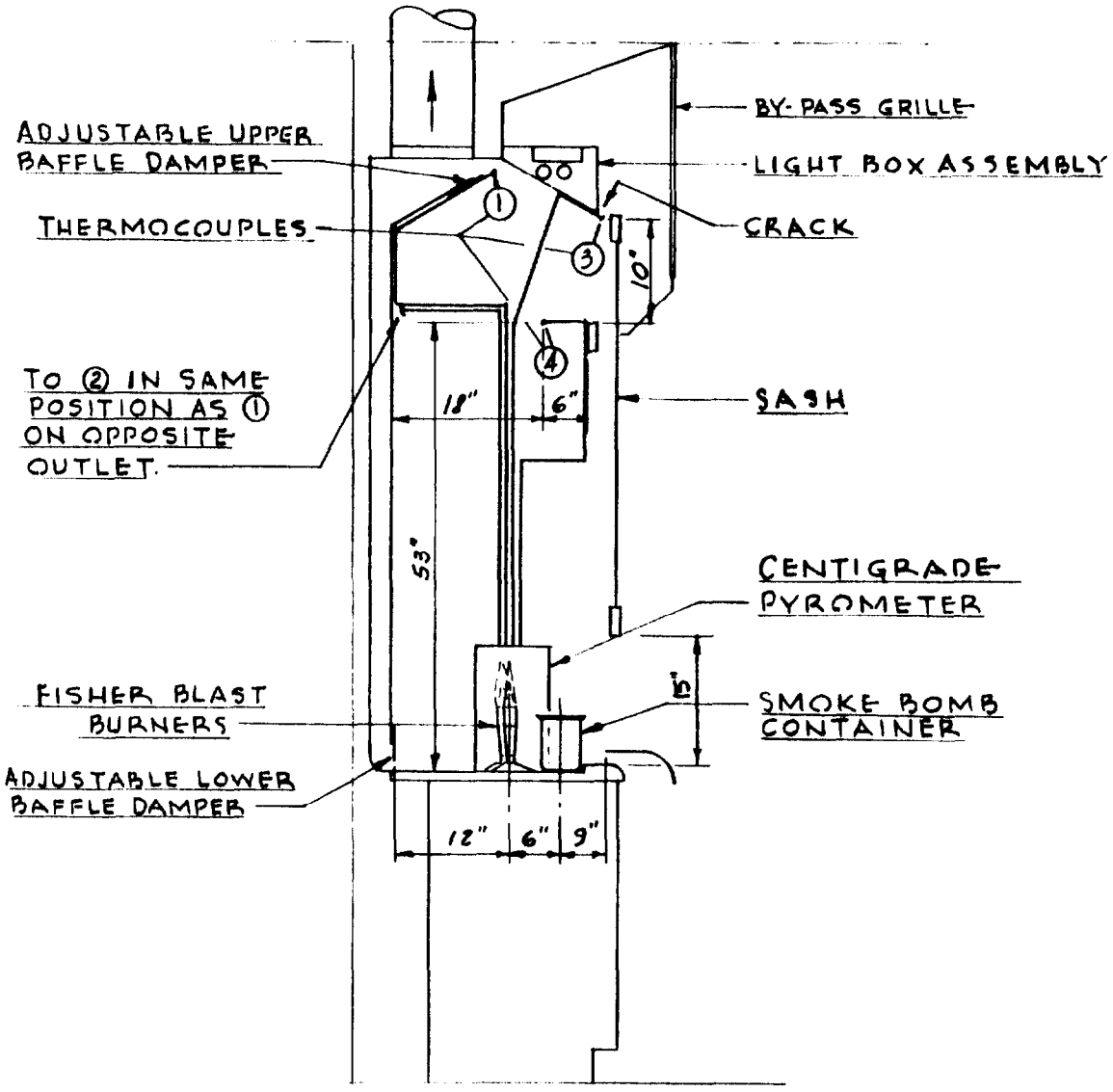

HOOD CROSS-SECTION

NOT TO SCALE

SKETCH NO 13

HOOD AIR-FLOW STUDY
BLDG-4500 SOUTH
W.R. A-06926-11D
R.H. FORDE - J.D. CLAPP

At the lower face velocities a smoke bomb was ignited in the metal open-top container. Close observation was made to detect any smoke outflow from the hood, particularly leakage through the crack between the light box assembly and the sash.

If no leakage occurred, a blast burner was ignited to add heat inside the hood. The heat output of the blast burner was standardized by installing an orifice plate in the compressed air supply. The orifice plate had an opening drilled with a No. 52 drill which was 0.0635 inches in diameter. After a ten-minute warm-up period, temperature readings were taken at each thermocouple position. The smoke test was performed, and the leakage or no leakage observation was recorded.

Temperature steps were varied until definite points of leakage or non-leakage of smoke were established.

The above procedure was followed for face velocities of 50, 75, 100, 125, 150, 175, and 200 feet per minute.

Scraper-type panels were installed in the hood to block the crack between the light box assembly and the sash. The entire test procedure was then repeated.

Effect of Air Flows and Air Pressures

Air flows and air pressures in surrounding spaces affect flow of air into a fume hood. Although each laboratory has a ducted air supply from the air-conditioning system, it is not sufficient to totally supply the exhaust system. Additional air is drawn through grilles mounted in the walls between the labs and corridors. Similar grilles are in walls between offices and corridors. Air directly supplied to offices flows from the office through grilles to the corridors, and then through grilles into the laboratories. A slight positive pressure in the offices, atmospheric pressure in the corridors, and negative pressure in the laboratories should result from this scheme of air flow.

A door opening or closing in an office, laboratory, or corridor, particularly to a stair well, causes a noticeable change in the pattern of hood face velocity. When air was flowing at points close to the velocity versus temperature curve, puffs of smoke were observed leaving the hood as the doors were used.

Air flows and pressures in service pipe chases between labs and under benches contribute to unstable air patterns of hood face velocity. The pipe chases have a direct air path to the attic through openings such as around piping, conduit, and ductwork. When one of the large attic exhaust fans switches on or off, the resultant change of air flow and air pressure is transmitted through the pipe chases to the laboratories. This contributes to the possibility of a puff of fume leakage from the hood.

Supply Air System to Laboratories

As formerly mentioned, a duct system directly supplies air to the laboratories. If the fan that moves air in this system cuts off, a change in the hood face velocity in both quantity and pattern takes place immediately. In the past, the fan has been cut off for emergency maintenance, automatic low temperature cut-off from steam failure, and electrical interruption. A fan shutdown, occurring twice during this experiment, was indicated as a change in air flow by an instant rise in pyrometer temperature readings.

If a heat source is being used in a fume hood, the temperature rise due to a decrease in air flow can cause fume leakage if the resultant temperature-velocity point is above the curve (see Curves 1 and 2).

As a safety measure, upon an interruption to the building air supply system, users of the fume hood must be cautioned to immediately close the hood sash. Heat must be turned off and preparations must be made to evacuate the laboratory.

Location of Hood in Laboratory

The location of a fume hood in the laboratory has a decided effect on the air face velocity pattern. The majority of hoods in 4500-South are located at right angles to the supply air stream from sidewall registers. The velocity of air passing the sash opening can create eddy currents that will spin fumes out of the hood.

Sidewall registers and ceiling diffusers supply air to the laboratory containing the experimental hood. At a low face velocity, under 100 fpm and particularly in the 50 to 75 fpm range, with the sash at the 15-inch position, disturbance caused by a passing air velocity can create a leakage of fumes from the hood--smoke in this case.

The hood is located with the left side against the rear wall of the laboratory. This position contributed to a decrease in the air velocity on the side of the hood face next to the wall.

Exhaust Ductwork

Exhaust ductwork leaving the hood caused an uneven pattern in the hood face air velocity. An attempt was made to increase the air quantity by increasing the fan speed. An increase in static pressure across the fan resulted, but the air velocity did not appreciably increase.

Above the laboratory ceiling near the top of the fume hood an inferior duct installation was discovered. The main exhaust duct had been connected at an angle to a cross header between the two hood exhaust outlets (see Sketch No. 14). The header created a direct collision between two air streams, and the angle connection caused a turbulence near the ductwork intersection. Both conditions caused a resistance that amplified to such an extent that very little increase in flow occurred as fan speed was increased.

The header connection was replaced with a Y-type connection which reduced the resistance and removed its amplification. Sketch No. 14 shows a recommended ductwork alteration to replace header-type connections on other fume hoods in the building.

Exhaust Fan and Filter Installation

The exhaust fan is the most mechanically complicated part of the exhaust system. Variable forces are converted to a mechanical reaction at this point. Pressure indication, control devices, and maintenance operations must be concentrated in close propinquity.

A manometer was placed in view for operating the control damper in the filter box. The manometer sensing tubes were inserted, one each, in the fan suction duct and in the fan discharge ductwork. A magnehelic gage tied into the same tubes was located in the laboratory three floors below the attic fan deck. The

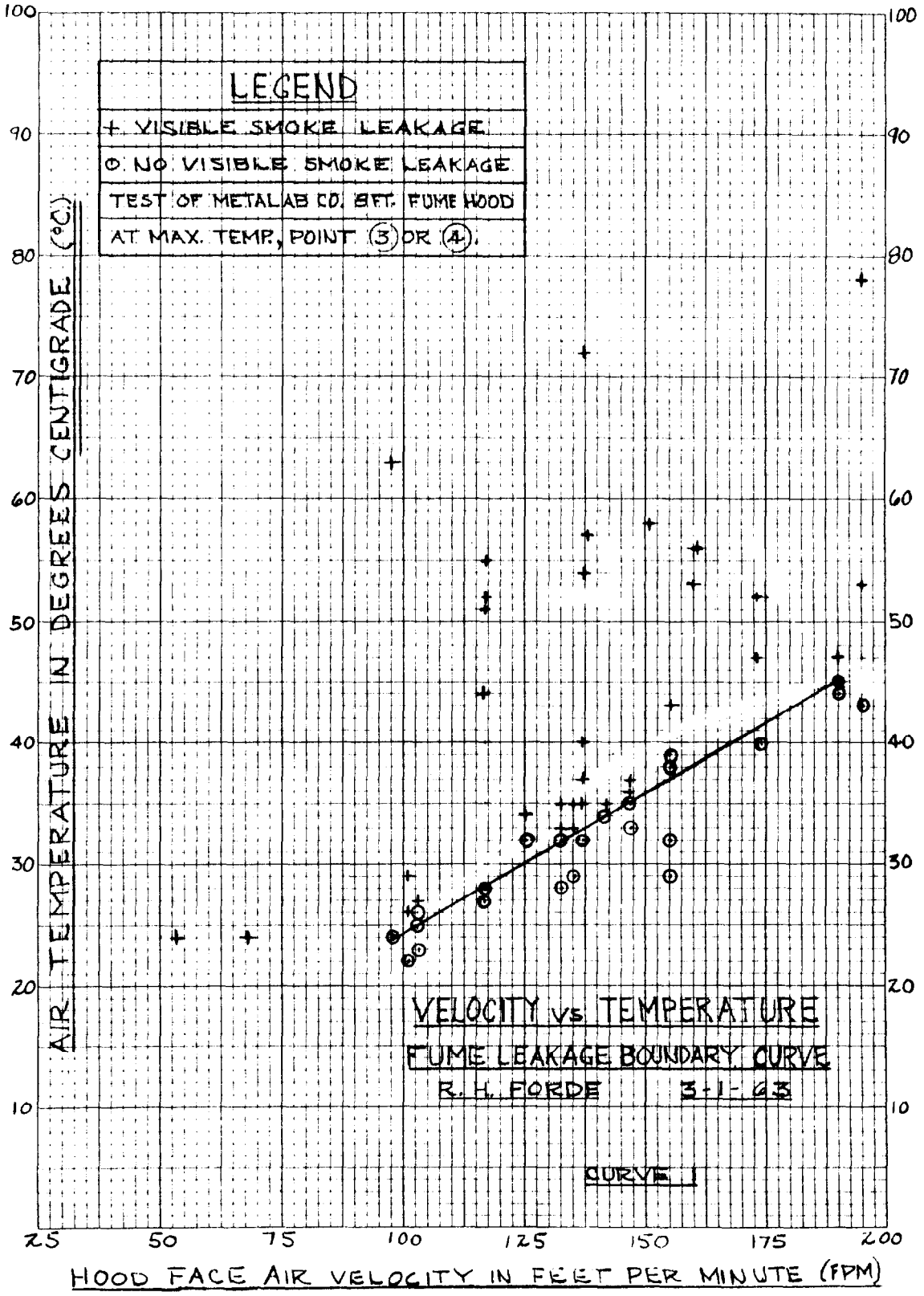
LEGEND
+ VISIBLE SMOKE LEAKAGE
⊙ NO VISIBLE SMOKE LEAKAGE
TEST OF METALAB CO. 8FT. FUME HOOD
AT MAX. TEMP., POINT (3) OR (4).
AIR TEMPERATURE IN DEGREES CENTIGRADE (°C.)
HOOD FACE AIR VELOCITY IN FEET PER MINUTE (FPM)
VELOCITY vs TEMPERATURE
FUME LEAKAGE BOUNDARY CURVE
R. H. FORDE 3-1-63
CURVE 1
100
90
80
70
60
50
40
30
20
10
25
50
75
100
125
150
175
200

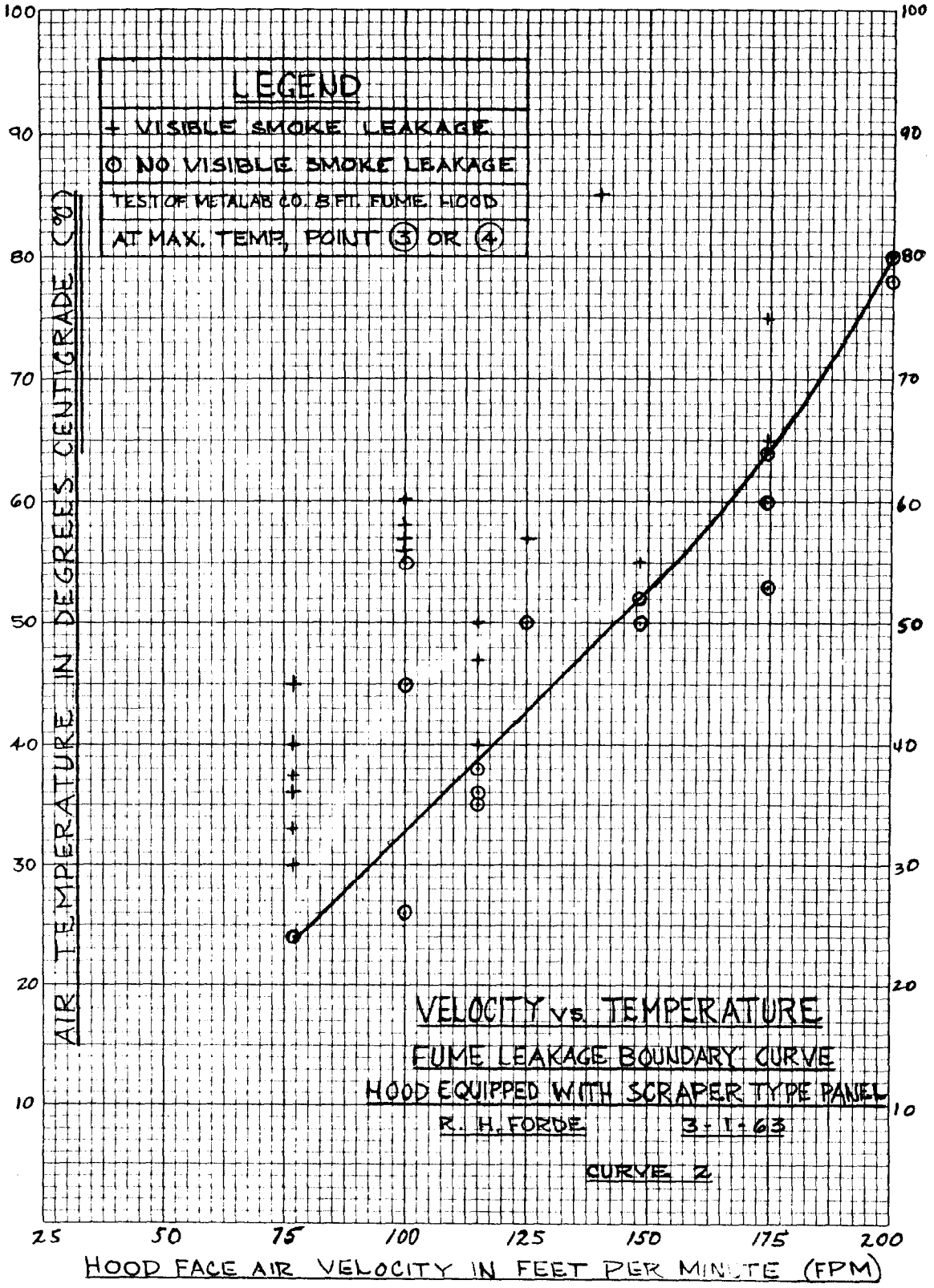
LEGEND
+ VISIBLE SMOKE LEAKAGE
⊙ NO VISIBLE SMOKE LEAKAGE
TEST OF METALAB CO. 8 FT. FUME HOOD
AT MAX. TEMP. POINT 3 OR 4
AIR TEMPERATURE IN DEGREES CENTIGRADE (°C)
HOOD FACE AIR VELOCITY IN FEET PER MINUTE (FPM)
VELOCITY vs. TEMPERATURE
FUME LEAKAGE BOUNDARY CURVE
HOOD EQUIPPED WITH SCRAPER TYPE PANEL
R. H. FORDE 3-1-63
CURVE 2

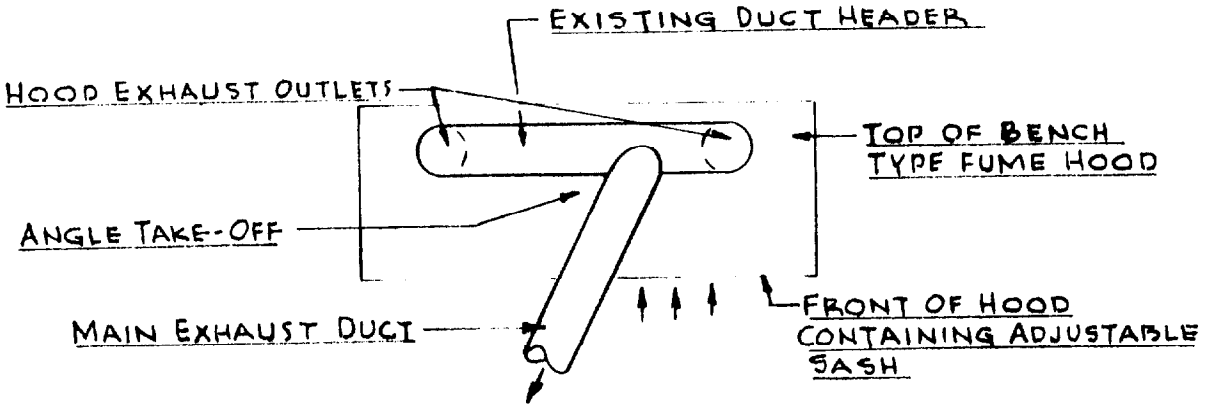

PLAN OF EXISTING HOOD EXHAUST DUCTWORK - NOT TO SCALE

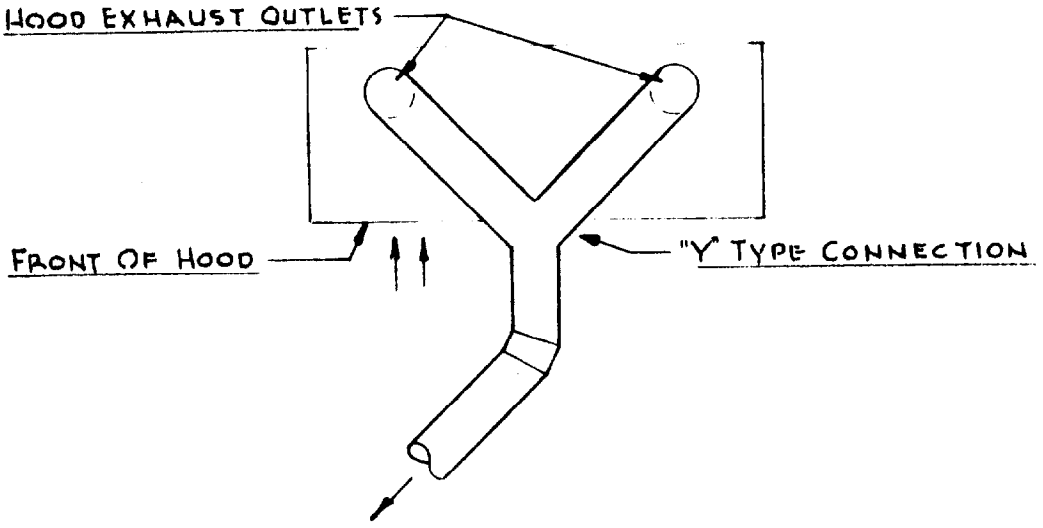

PLAN OF RECOMENDED ALTERATION TO HOOD EXHAUST DUCTWORK NOT TO SCALE

SKETCH NO. 14
HOOD AIR FLOW STUDY
BLDG 4500 SOUTH
W.R. A-06926-UD
R.H. FORDE - J.D. CLAPP

intercommunications equipment provided oral contact between the man operating the control damper and the man determining the air quantity.

Removal of the high efficiency filter increased the control range of the damper. The air quantity of the exhaust fan increased to near 2000 cfm which produced a 200 fpm hood face velocity.

A higher horsepower motor and larger filter box are required if the face velocity of a fume hood, equipped with a scraper-type panel, is increased over 125 fpm. A hood face velocity of 125 fpm, with the sash at the 15-inch open position, represents an air quantity of 1100 cubic feet per minute.

The rated flow of a 24-inch-by-24-inch-by-12-inch high efficiency filter is 1100 cfm with a resistance, without dirt loading, of about 1.0 inch water gage. Any substantial increase of air quantity above 1100 to 2200 cfm must have an additional filter to reduce the initial resistance and allow reserve resistance for the dirt loading.

Since installation of a new larger duct would be difficult in most cases, the air velocity must be increased through the existing ductwork for a greater air quantity. A higher velocity in the duct increases the resistance to air flow. With both a greater air quantity and larger resistance, an electric motor with more horsepower will be required.

When the increased power demands of the exhaust fan to move the larger air quantities are satisfied, an increase in exhaust fan speed is required. Any increase in fan speed must be accompanied by amperage measurements to determine if a larger motor is necessary to maintain service.

Building Exterior Conditions

Exterior conditions, such as wind, atmospheric pressure, and temperature, affected the hood face velocity measurements. On gusty days the wind varied the discharge static pressure of the exhaust fan which caused slight fluctuations in velocity measurements.

A small increase in face velocity should be made to allow for any atmospheric pressure changes until the building air systems are balanced.

An air temperature below 40 degrees can cause a supply fan shutdown if there is an interruption in the air preheat system. Because a major decrease in face velocity occurs, the precautions stated before must be made.

Modified Hood

Tests were conducted on the hood equipped with scraper-type panels as described earlier in this report. As compared with the unmodified hood, the advantages are:

1. The scraper-type panel installation caused an increase in the hood face velocity of approximately 10 per cent. This increase of velocity was due to the same quantity of air being drawn through an area reduced by over 10 per cent at a 15-inch sash opening.

2. The hood equipped with the panels contained air, with no observed leakage, at temperatures 14 to 18 degrees Centigrade or 25 to 35 degrees Fahrenheit greater than the unmodified hood in the 100- to 175-foot-per-minute hood face velocity range (see Curve 3).

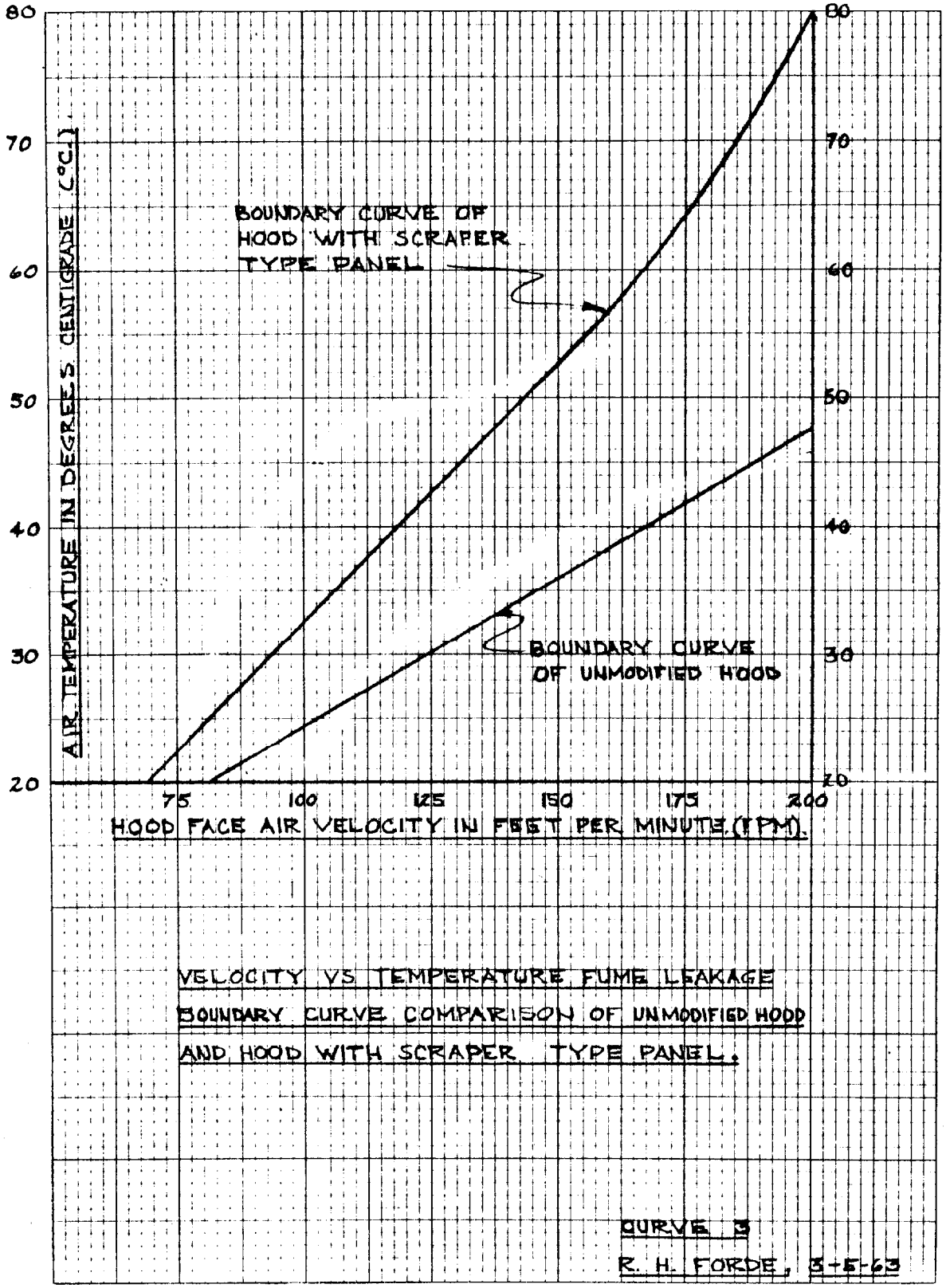

VELOCITY VS TEMPERATURE FUME LEAKAGE BOUNDARY CURVE COMPARISON OF UNMODIFIED HOOD AND HOOD WITH SCRAPER TYPE PANEL.

CURVE 3

R. H. FORDE, 3-5-63

3. With two blast burners at maximum heat, no leakage was observed at 200 fpm hood face velocity (15-inch sash opening) in the hood equipped with the scraper-type panel.

Velocity Measurements

In hood face velocity measurements taken with the anemotherm air meter, it was found that the reading taken in the center of the sash opening, vertically and horizontally, was the closest to average velocity. The variation of high velocity on the right and of low velocity on the left were, to a large extent, due to the hood location near the wall. Highest readings always were at the top of the open sash space and the lowest readings at the bottom. This pattern could be altered by changing the position of the baffle dampers inside the hood. (See Sketch No. 2)

Analysis of Curves

General

Three velocity versus temperature fume leakage boundary curves are presented with this report. Curve 1 shows the results of the test of an unmodified Metalab Company 8-foot bench-type fume hood. Curve 2 shows test results of the same fume hood modified by an addition of a scraper-type panel. Curve 3 is a comparison of Curve 1 and Curve 2.

On Curves 1 and 2 the plus symbol designates the velocity-temperature points at which smoke leakage was visible. In every case of leakage, smoke left the upper hood enclosure through the crack between the sash and the light box assembly. The circle symbol represents the velocity-temperature points where no smoke leakage was visible.

The abscissa of the curves represents hood face velocity. This air velocity was an average of a nine-point traverse consisting of three vertical and three horizontal measurements taken in the vertical plane of the sash opening.

The ordinate of the curves is air temperature in Centigrade degrees at the maximum reading of the thermocouples in the four positions shown in Sketches No. 12 and No. 13. Thermocouples three or four always sensed the highest temperature, but thermocouples one and two sensed a closer approximation of the temperature of the air leaving the hood through the exhaust ductwork.

Heat quantities cannot be accurately calculated from the temperature measurements because, although total airflow is known, airflow from each exhaust port is not known. A large unknown percentage of the air flows through the lower baffle damper opening (see Sketch No. 2).

Curve 1

Curve 1 is the fume leakage boundary curve of an unmodified fume hood. This curve resembles a 30-degree line from horizontal when the ordinate increases in temperature 2 degrees Centigrade for every 5-foot-per-minute velocity increase of the abscissa.

Four points of no visible smoke leakage are located above the fume leakage boundary curve. The actual curve would have an irregular appearance if these points were included on the line. The irregularity can be caused by variables affecting fume hood air flow. Since the observed points were within 2 degrees Centigrade of uniformity, a straight line was selected to represent the recommended fume leakage boundary curve.

Curve 2

Curve 2 is the fume leakage boundary curve of a fume hood modified by the addition of a scraper-type panel. This curve resembles a 45-degree line from horizontal under the same conditions as Curve 1.

The efficiency of the scraper-type panel can be increased by a careful field fit of the neoprene wiper blade. The blade ends can be cut to fit closely into the irregular shapes created by cable and sash channels. This high efficiency was illustrated by points of no visible smoke leakage high above the boundary curve at velocities of 100 fpm and 125 fpm. These points were obtained by taping blotting paper at the end of the blade to conform to the shape of the irregular channels.

A loosely fitted blade, without blotting paper, produced the points (at 75 fpm, 115 fpm, 150 fpm, 175 fpm, and 200 fpm) that were used to define the boundary curve.

At a velocity of 200 fpm, the heat generated by two Fisher blast burners at maximum capacity did not produce visible smoke leakage. The maximum capacity of the blast burners was acquired with the following conditions: gas control valve full open with a line pressure of 13.5 inches of water, air control valve full open with a line pressure of 12.5 psi, and a No. 52 drill size orifice in the compressed air line.

Curve 3

Curve 3 indicates a comparison in fume leakage boundary curves between a hood that is unmodified and a hood that is equipped with scraper-type panels. The area between the curves illustrates the improvement gained from the addition of the scraper-type panels.

The Use of Activated Charcoal Iodine Monitors During and Following a Release of Fission Product Iodines*

Charles F. Foelix and L. Gemmell
Health Physics Division
Brookhaven National Laboratory

Description of Monitoring System

The present core of the Brookhaven Graphite Reactor consists of some 4900 highly enriched uranium fuel elements loaded in 615 horizontal fuel channels passing through a 25 foot cube of graphite moderator and reflector. The core is divided into two halves (north and south) by an 8 cm. wide vertical gap in the center of the graphite (Figure 1). The cooling air enters the reactor through inlet filters, at the rate of 270,000 CFM, passes into the central gap and flows bi-directionally through the north and south halves of the core. It then enters the collecting plenums and flows into the north and south ducts. The air is first monitored by the north and south exit air monitors located within the pile building. These are moving filter tape monitors with beta scintillation detectors. They are essentially operational monitors and are maintained by reactor operations. The air then passes through the exit air filters, heat exchanger, venturi and on to the fan house where the north and south ducts join. After the fan house the air is monitored for Argon-41 by a Kanne ion chamber system. Just before the air enters the base of the stack, the air is monitored for particulate activity and Iodine-131. The Health Physics Division maintains and operates these systems. The particulate monitor consists of a moving filter tape with a beta scintillation detector and is calibrated to measure the rate of release of particulate activity.

* Work done under the auspices of the Atomic Energy Commission

COOLING AIR SYSTEM
BROOKHAVEN PILE

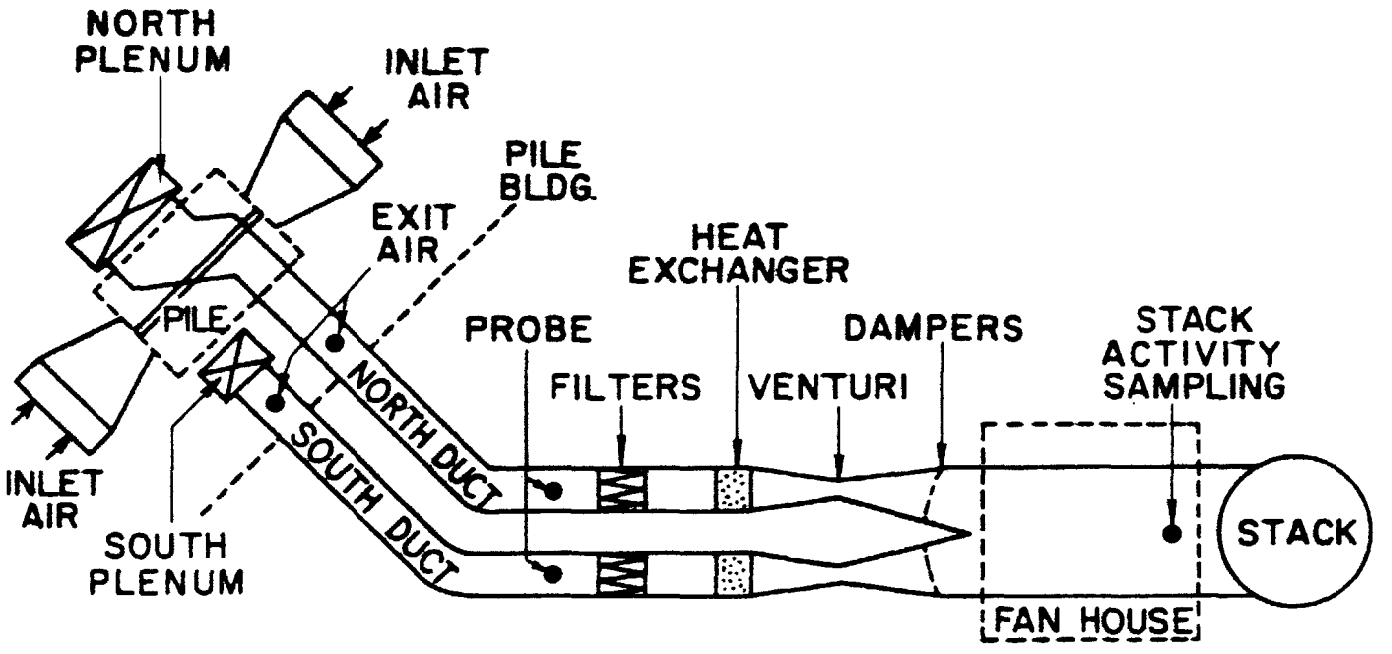

Figure 1

The release of I^{131} is monitored by continuously passing a measured volume of effluent air through a high efficiency filter and an activated charcoal trap[1] in series (Figure 2). The filter and trap are normally changed at 2 or 3 day intervals. The quantity of I^{131} on the filter and trap is determined by counting in a calibrated gamma spectrometer after sufficient time has elapsed to permit the decay of the shorter lived iodines. All necessary decay and sampling efficiency corrections are made and the total stack release of I^{131} is computed. This system of I^{131} monitoring was originally intended as an inventory monitor to accurately measure the total release of I^{131} but was not intended to act as an operational monitor.

Releases of Radioactivity

During a two-day period in September of 1962 there were three distinct short term releases of activity which were the result of a partial cladding failure on one of the 6800 fuel elements. Although these releases were not of serious proportions, they did provide valuable experience in the area of reactor effluent monitoring under emergency conditions.

The three releases were characterized as follows on the operational monitors:

1. The north duct particulate monitor showed a peak which in itself was not large enough to cause concern except that there was no similar peak on the south duct monitor. When both monitors show a peak the presumption is that some material in the cooling air has been activated. The classic example is a vehicle or stationary engine operating near the air intakes and the exhaust fumes being sucked into the reactor. When only one duct monitor shows a peak it indicates that activity has been released in that half of the reactor.

2. The Kanne chamber monitor responded promptly to a full scale reading and returned to normal which indicated a short, concentrated

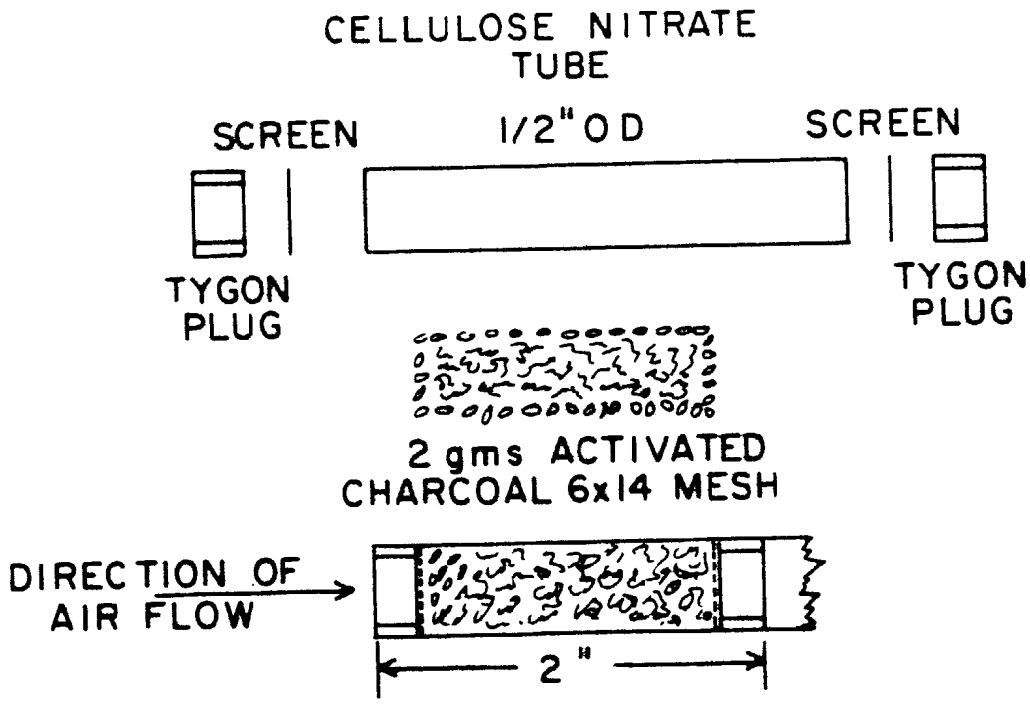

ACTIVATED CHARCOAL TRAP — FITS IN 5/8" NaI WELL CRYSTAL WITH COPPER LINER OR IN JIG FOR COUNTING WITH 3x3 NaI CRYSTAL

ACTIVATED CHARCOAL TRAP

Figure 2

release of gaseous activity.

3. The particulate monitor at the base of the stack showed a peak of modest proportions which again would not in itself be cause for alarm.

The first release occurred at 2100 hours on September 10, 1962. At 0845 the next morning the charcoal trap was taken from the sample line and placed in the gamma spectrometer within ten minutes after removal. It was immediately apparent from the display of the gamma spectrum on the 'scope of the analyzer that a release of equilibrium fission product iodines had occurred. The 0.365 MeV photo-electric peak of I^{131} was prominent and almost as large as the 0.53 MeV peak from I^{133}. Normally the I^{131} peak is almost entirely masked out and much smaller than the I^{133} peak. Under normal conditions the reactor will release about 8 mc of I^{131} per day. It was calculated that the first release totaled about 70 mc. The second and third releases contained 180 and 300 mc of I^{131} respectively.

Locating the Defective Fuel Elements

Needless to say, a great deal of effort was being expended to find the source of the releases but finding one or two damaged fuel elements out of 3400 elements is a difficult and time consuming task. Between the second and third releases the reactor was shut down and the elements in several suspected channels were inspected. These channels were suspected because of higher temperature readings on the thermocouples in these channels. The elements appeared normal so the reactor was brought up to a reduced power level, and shortly thereafter the third release occurred.

It was decided to reduce power level and to take air samples from each fuel channel. The samples were taken through the charcoal traps and the traps were monitored with a survey instrument. One fuel channel was found to be much higher than the rest. The reactor was shut down and the elements in this channel were removed and inspected. Two of the four elements appeared to be

damaged. One had a spotted appearance and the other was badly blistered. Subsequent hot cell inspections and testing of the elements proved that they were the source of the releases.

The reactor was again brought up to power and no further distinct releases occurred, but the stack samples showed that the I^{131} being released was much higher than normal, initially about 10 times higher and slowly tapering off to normal in about 20 days. It was theorized that some of the iodine from the elements had condensed or adsorbed on the duct work and exit air filters and was slowly subliming or exchanging off into the air stream. The analysis of additional air samples taken on charcoal at the north and south duct monitors and at the base of the stack supported this theory.

Table I shows the ratio of I^{133} activity to I^{131} activity in fresh and equilibrium fission products at various decay intervals.

Table I

Ratio of I^{133} to I^{131} Activity for Fresh and Equilibrium Conditions

Decay Time	Fresh	Equilibrium
0	21	2.3
1 hr	19	2.2
1 day	9.9	1.1
2 days	4.9	0.55
3 days	-	0.27
4 days	-	0.13

The ratio found in the effluent cooling air at the base of the stack under normal conditions is about 8, which corresponds to about 1-day-old fresh fission products. The sample taken during the time of the second release showed a ratio of 1.7 which is consistent with slightly aged equilibrium fission products.

On September 15, about 3 days after the last release, a set of 24-hour

samples was started with samples taken at the north and south duct monitor locations and at the stack. When these samples were analyzed the following information was obtained:

	South Duct	North Duct	Stack
Ratio $\frac{I^{133}}{I^{131}}$	8	1.4	1.2

The rate of release and the ratio found in the south duct was normal. The ratio in the north duct and stack samples was not as low as one would expect for 3-or-4-day old equilibrium fission products. However, if the sample results were corrected by subtracting the normal amount of I^{131} and I^{133}, the remaining activity shows a ratio of about 0.1 which corresponds to several day old equilibrium fission products. Also, it was found that the amount of I^{131} being released from the stack was almost twice the amount found in the duct samples indicating that about 50% of the I^{131} being released was coming off the filters.

These samples then, supported the theory that the idoine released from the fuel elements had adsorbed or condensed on the duct work and filters and was slowly subliming or exchanging off into the air stream. A subsequent experiment showed that the adsorption-exchange mechanism was the dominant one. In the course of trying to develop a new operational iodine monitor, stable I^{127} was released into the reactor to produce I^{128} to check the response of the new monitor. Each time this was done, the stack charcoal iodine monitor showed a significant increase in the amount of I^{131} released. The fact that when I^{127} is put in I^{131} comes out indicates that even under normal operating conditions there is iodine adsorbed in the reactor structure which exchanges off into the air stream. This knowledge of the behavior of iodine suggests a method of decontaminating reactors or other structures.[2,3]

Conclusions

The system of iodine monitoring in use at BNL has proved to be a satisfactory means of measuring the release of I^{131} to the environment under emergency conditions. Although the cooling air effluent is monitored by other means, which indicated that something had been released, only the system using activated charcoal traps and gamma spectrum analysis could reliably indicate that a release of equilibrium fission product iodines had occurred and accurately measure the amount released. Other media tested by BNL and others[4,5] do not have as consistently high collection efficiency as the charcoal traps. The system was also useful in locating the defective fuel elements and in explaining the behavior of iodine within the reactor structure.

BIBLIOGRAPHY

[1] C.W. Sill and J.K. Flygare, Jr., "Iodine Monitoring at National Reactor Testing Station", 1960, Health Physics, Vol. 2, No. 3, pp. 261-68

[2] W.J. Megaw and F.G. May, "The Behaviour of Iodine Released in Reactor Containers", 1962, Reactor Science and Technology, Vol. 16, pp. 427-36

[3] Robert E. Adams and William E. Browning, Jr., "Removal of Iodine From Gas Streams", 1961, TID-7627, pp. 242-60

[4] L. Silverman, R. Dennis, E. Kirstal and F. Stein, "Iodine Collection Studies", 1960, TID-7593, pp. 322-43

[5] Harry J. Ettinger, "Iodine Sampling with Silver Nitrate Impregnated Filter Paper", 1963, Presented at 8th Annual Meeting of Health Physics Society in New York. Abstracted in Health Physics, Vol. 9, No. 8 pp. 872

RESPIRATOR FILTER TESTING AT LOS ALAMOS*

R. N. Mitchell and H. J. Ettinger
September 10, 1963
Los Alamos Scientific Laboratory
University of California
(Contract W-7405-ENG-36)
Los Alamos, New Mexico

I. Introduction

During the period 1960-1962, the Los Alamos Scientific Laboratory purchased approximately 23,000 high efficiency filter cartridges for half mask respirators and 1300 high efficiency filter cartridges for full face respirators at an approximate cost of $20,000. These are for use in work areas where plutonium or other radioactive materials are handled, although in many instances respirators are worn only as a precautionary measure and little or no radioactive material is deposited on the filter.

As of April 1963, we have issued 571 full face masks and 62 half masks to Los Alamos personnel on an individual basis, and several hundred more on a nonindividual basis. Respirators are sent to the respirator laundry at least once a month or when contaminated due to use.

Because of this usage record and because all filter cartridges on respirators received at the laundry were discarded although more than 75% had no detectable radioactive contamination, we considered reusing the uncontaminated filter cartridges. Before the filters could be reused, we had to make certain that the filter was intact

and still exhibited a high filtering efficiency. The most practical method of rapidly and accurately determining the filtering efficiency of such a large number of filters is to use the DOP respirator filter tester developed by the U. S. Army Chemical Corps.[1] We estimated that a respirator filter tester would pay for itself within a relatively short time period by permitting the reuse of filter cartridges.

II. DOP Tester

An investigation of possible manufacturers of a DOP respirator filter tester was initiated. Three manufacturers were willing to construct a tester based on design criteria for the U. S. Army Chemical Corps Model E-27 tester. Price quotations for these units ranged from $7,550 to $13,600. A tester was eventually purchased from T. D. Associates, Baltimore, Maryland, for $7,550. This tester included modification of the Army Chemical Corps' original design to permit the testing of six different commercial respirator cartridges. The original Army Chemical Corps' design only permitted testing of the Army M-11 ultra filter cartridge. The price quoted included a one-day checkout of the machine at Los Alamos by the manufacturer.

The tester operates by passing a 20 liters per minute (lpm) airstream through a preheater and then over the surface of liquid DOP which is maintained at 172° C in the smoke generator. An 80 lpm dilution airstream mixes with the DOP airstream leaving the smoke generator, thereby forming a liquid aerosol. The particle size of the DOP aerosol is controlled by adjusting the temperature of the dilution airstream. The aerosol passes into an aging chamber, where it is stabilized and exhausted to the test chuck containing the respirator filter cartridge being evaluated. The flow

through the filter being tested is 16 lpm. Samples of the DOP aerosol entering and passing through the respirator filter cartridge are directed through a forward light scattering chamber to determine per cent penetration of DOP aerosol. Particle size of the DOP aerosol is determined by passing an aliquot of the aerosol through an Owl which determines the degree of polarization of the scattered light beam and relates this to particle size.[2] Fig. 1 shows the DOP tester.

III. Test Program

Only high efficiency filter cartridges are considered for testing for reuse. Any cartridges with combination particulate filter and sorbent are discarded at the laundry when respirators are sent in for cleaning.

The filter cartridges are removed from the facepiece at the laundry and monitored. All filter cartridges that at contact have an alpha count of less than 100 counts per minute as measured with a 2π geometry, 60 sq cm, PeeWee probe and a beta-gamma count of less than 0.2 mr/hr as measured with an open shield GM tube are considered potentially available for reuse.

A preliminary pressure drop test is made on these cartridges. Table I gives the pressure drop range on new filters as received from the manufacturer. Any used filter that has a pressure drop within a range determined by tests on new cartridges is considered satisfactory for reuse. Any cartridge which has a pressure drop above the upper limit of this range is assumed to be partially plugged and is discarded. Pressure drop testing also provides a method of precluding contamination of the DOP tester. It was feared that radioactive contaminants on the cartridge might be pulled off during DOP testing. During pressure drop testing, the

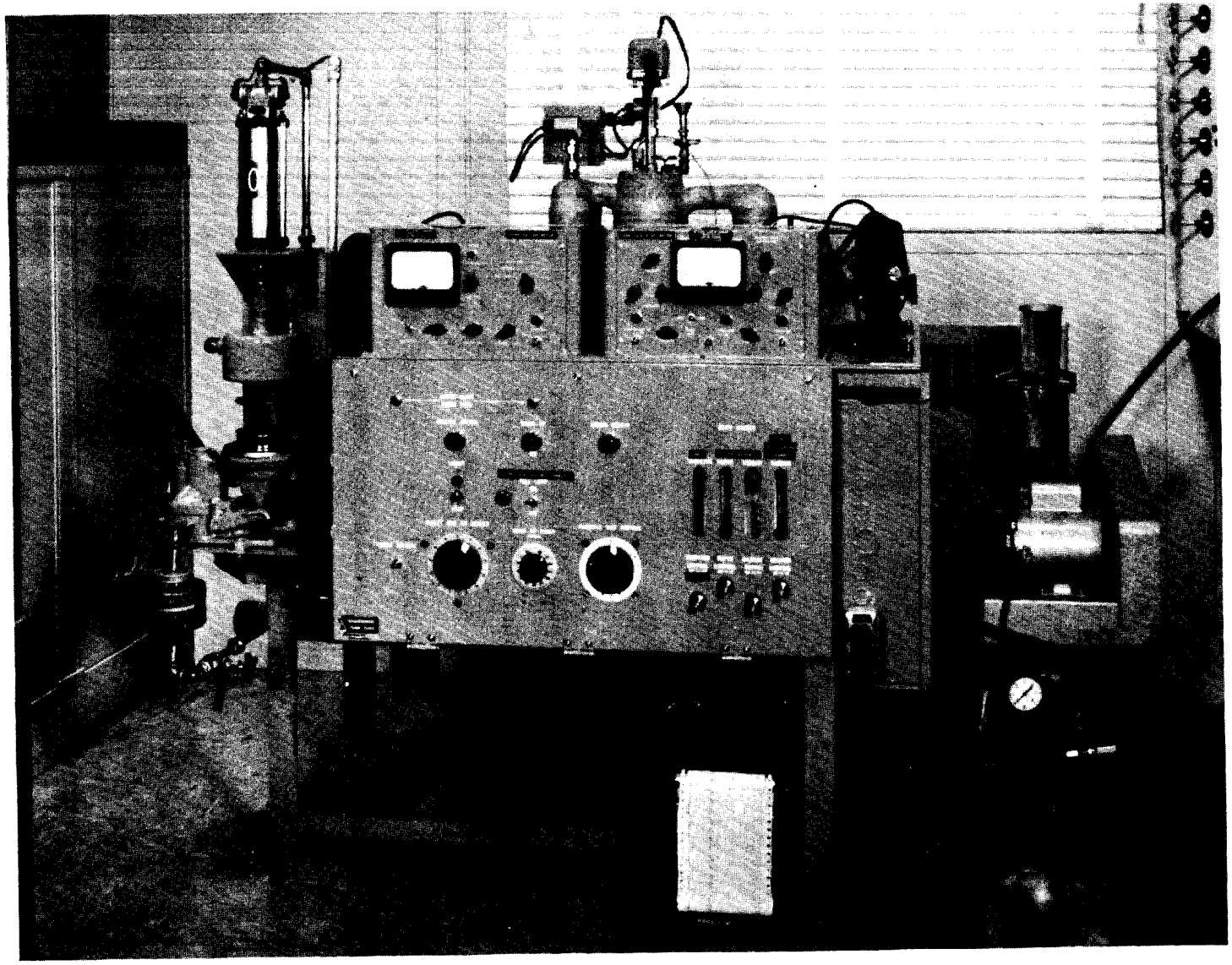

Fig. 1. DOP Respirator Cartridge Tester.

air exhausted through the respirator cartridge is filtered, and the filter alpha counted prior to DOP testing. If this filter shows a high radiation count, the respirator cartridges are screened to determine the source of contamination prior to DOP testing.

A maximum permissible penetration of 0.05% has been set, based on the proposed U. S. Bureau of Mines Schedule 21-B.[3] All cartridges which exhibit a DOP penetration greater than 0.05% are discarded. Fig. 2 shows the various commercial cartridges which have been tested using the DOP tester.

TABLE I. NEW FILTER TEST RESULTS

Full Face Mask

Type	Number Tested	Pressure Drop* mm H_2O at 85 lpm		Number with DOP Penetration > 0.05%
		Range	Median	
A	62	40-53	48	None
B	116	29-40	31	3
C	200	15-20	17	1

Half Mask

Type	Number Tested	Pressure Drop* mm H_2O at 42.5 lpm		Number with DOP Penetration > 0.05%
		Range	Median	
D	50	35-47	41	None
E	50	27-32	29	None
F	50	24-34	28	None

*Tested September 1963 at Los Alamos - altitude 7300 ft. No altitude correction made.

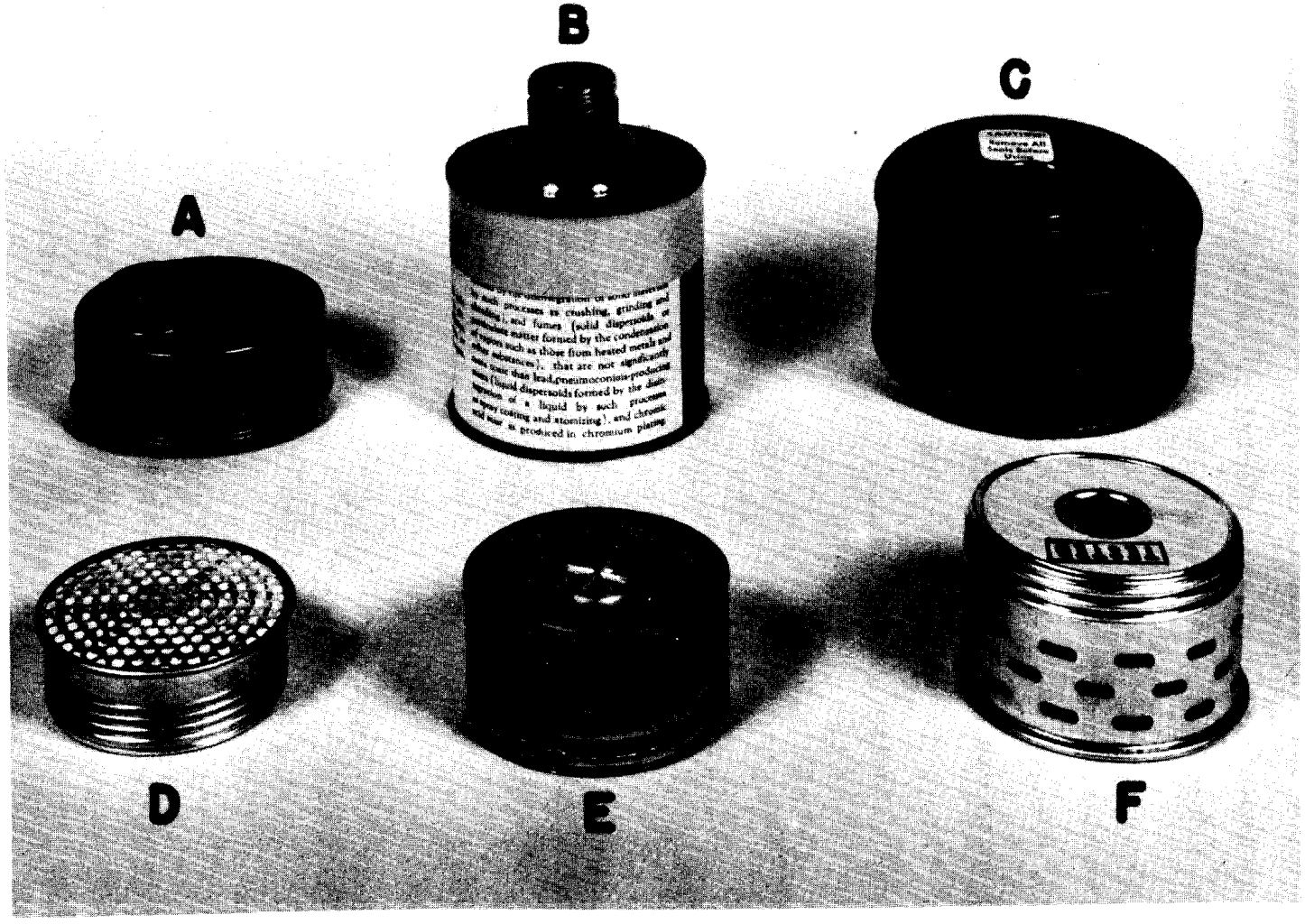

Fig. 2. Respirator Cartridges Tested at Los Alamos.

During the six month period since the installation of the tester, over 2100 high efficiency filter cartridges, both full face and half masks, have been tested. Of these, approximately 96% had a DOP penetration of less than 0.05% and were rated satisfactory and returned to the laundry for reuse. The type and number of filter cartridges tested is given in Table II.

TABLE II. USED FILTER TEST RESULTS

Type	Number Tested	Number with DOP Penetration > 0.05%
	Full Face Mask	
A	1070	16
B	441	57
C	None	--
	Half Masks	
D	359	11
E	187	5
F	119	2

A considerable percentage of those cartridges which were rated unsatisfactory had bent or deformed casings which prevented adequate sealing in the cartridge holder during DOP testing. In some cases, these deformities might have prevented sealing when the cartridge was installed in the respirator facepiece. Rather than attempt to evaluate these cartridges, it was decided to discard them as unfit for reuse.

In addition to the direct cost saving achieved by the reuse of high efficiency filter cartridges, we have found the DOP tester to be a useful tool in evaluating the quality of commerical res-

pirator cartridges. Table I gives test results on new cartridges as received from the manufacturer. In the test program at Los Alamos, we have detected manufacturing defects in three different makes of filter cartridges.

The most serious defect found was the breaking of the filter media by rough handling or dropping of the cartridge, resulting in a DOP penetration of several per cent. The filter manufacturers were notified of our findings and without exception took immediate action to eliminate this structural weakness. DOP tests have shown that the modified filter cartridges are satisfactory.

It is planned to continue to use the DOP tester as a quality control on filter cartridges purchased routinely and for new models as they are introduced.

IV. Summary

Based on six month's usage of this equipment, it appears that within a two to three year period, the savings realized by reuse of high efficiency filter cartridges will more than equal the cost of the DOP tester. In addition, this unit will serve as a useful tool in quality control operations.

V. Acknowledgement

The authors wish to acknowledge the assistance of Darell A. Bevis who was responsible for operation of the DOP tester and provided the cost operation data.

BIBLIOGRAPHY

1. Filter Units, Protective Clothing, Gas Mask Components and Related Products. Performance Test Methods. (Mil-Std-282) U. S. Gov't. Printing Office, Washington, D. C., May 1956.
2. Handbook on Aerosols. U. S. Atomic Energy Commission. U. S. Gov't. Printing Office, Washington 25, D. C., 1950.
3. Proposed Revision, Bureau of Mines Schedule 21A, Respiratory Protective Apparatus Tests for Permissibility Fees. U. S. Dept. of Interior, Bureau of Mines, Washington, D. C., Dec. 20, 1962.

THE NUCLEAR SAFETY PILOT PLANT -- CAPABILITIES AND EXPERIMENTAL PROGRAM

by

L. F. Parsly, Jr.

Abstract

The Nuclear Safety Pilot Plant is a facility for investigating the behavior of fission products released into a containment vessel as a result of a core meltdown accident. The plant includes a furnace for melting irradiated UO_2 fuel elements, a 1350-ft^3 model containment vessel, and various auxiliary equipment for containment simulation, for mocking-up techniques which would reduce the radioactivity concentration within the containment vessel, and for experiment evaluation. Fuel elements containing up to 1000 curies of activity may be melted under a variety of accident conditions which would simulate those in various accidents. The initial experimental program directed toward the transport phenomena of iodine, and employing both stable and radioactive iodine, is described.

INTRODUCTION

The Nuclear Safety Pilot Plant (NSPP) is a facility in which to melt UO_2 fuel elements and to make observations of the behavior of gaseous, volatile, and particulate fission products entering a model containment vessel.[1,2,3,4] The plant is installed in a shielded underground cell and is capable of handling at least 1000 curies of beta-gamma activity. The design of the plant and the current concept of the experimental program are described in this paper.

DESIGN AND CAPABILITIES

The principal components of the pilot plant are a furnace for melting UO_2 slugs and a 1350-ft^3 model containment vessel, which is shown in Fig. 1. The furnace, shown in Fig. 2, is a horizontal semicircular trough in which a water-cooled boat containing the fuel element to be melted can be moved. A plasma torch mounted at the center of the furnace above the boat provides heat for melting. The design concept was based on the requirement of loading and unloading the furnace remotely and providing an ultimate capability of handling fuel elements up to 30 in. long, although the first furnace has been built to handle fuel specimens up to 6 in. long. Preliminary testing of the plasma torch indicates that UO_2 can be melted readily and that the particles evolved range from 0.005 to 0.4μ.[1] Such particles are in the general size observed in other out-of-pile melting experiments.

An inert gas is required for plasma generation -- helium, argon, or nitrogen can be used. Most of the preliminary testing has been done with helium, although one test was run with argon. The argon flame melts a narrow slice in the center of the pellet, while the helium flame melts the entire pellet and is therefore preferred.

It is possible to introduce two other gas streams into the furnace and thus vary the meltdown atmosphere. One stream enters tangentially at the torch nozzle so that it will essentially surround the flame. The other is a sweep or purge stream introduced into the furnace body. These can be used to produce either an oxidizing or an inert atmosphere surrounding the melt.

The model containment vessel is a 1350-ft^3 vertical stainless steel pressure vessel. It will be used for observations of the behavior and transport of fission products released into it, including removal by various natural and imposed phenomena, such as deposition in the vessel and on specimens of various materials. The containment vessel is provided with internal headers and the walls with decontaminating solutions. There are provisions for installing up to 144 deposition coupons. Air samplers are provided at 6 locations which will enable determination of airborne particulate matter as a function of time, and one fallout sampler is provided which will enable observations to be made of the fallout as a function of time.

Auxiliary facilities include a gas sampling train containing particulate filters and charcoal adsorbers for collecting iodine, xenon, and krypton, means for purging the vessel and cell through a filter system, and equipment for makeup and storage of decontaminating solution, and for obtaining inventory data.

FURNACE DEVELOPMENT

A development program was carried out to obtain information on proper operation of a plasma torch in the furnace.[1,3,5] The objectives were to determine

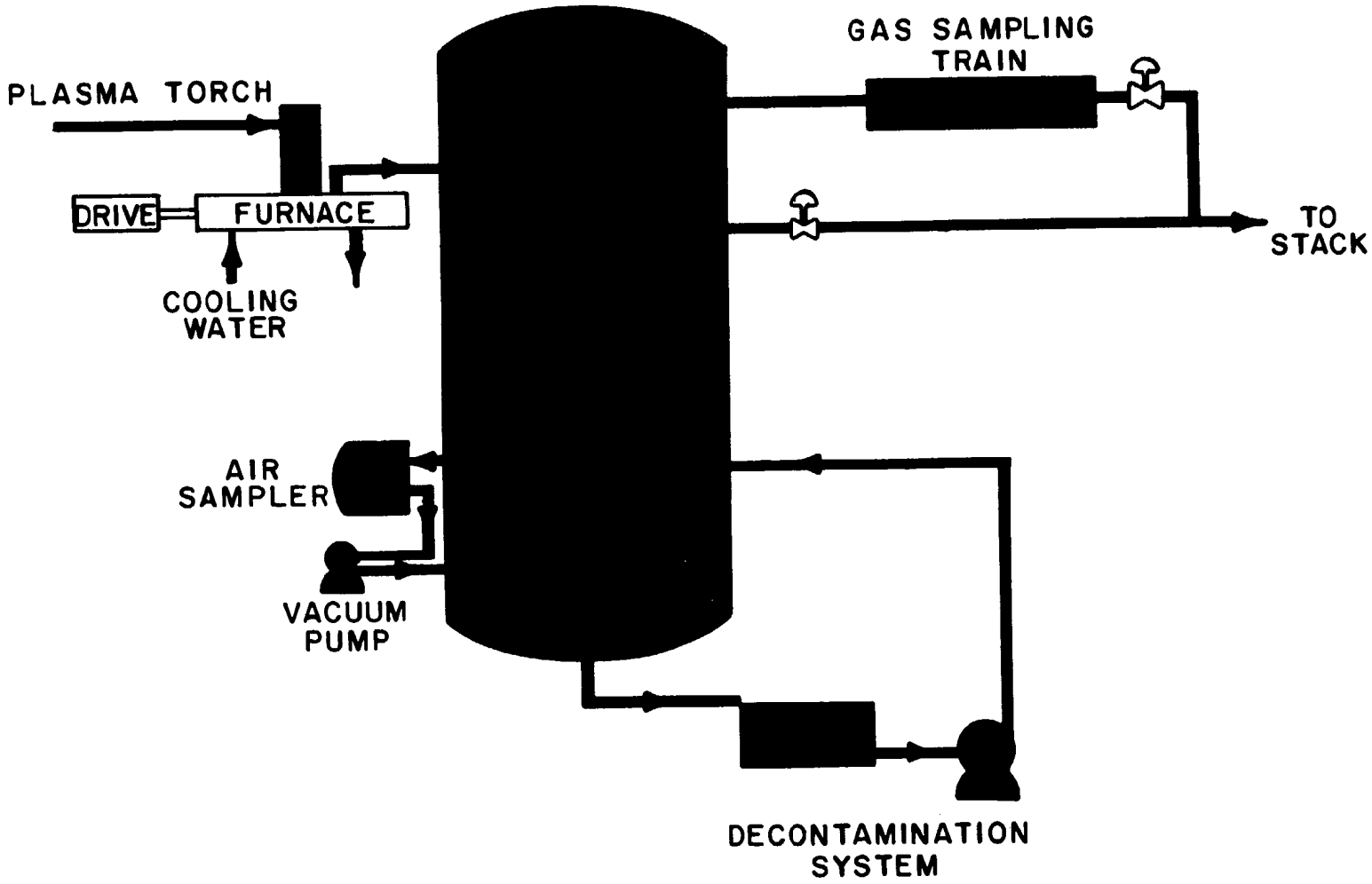
PLASMA TORCH
DRIVE
FURNACE
COOLING WATER
GAS SAMPLING TRAIN
TO STACK
AIR SAMPLER
VACUUM PUMP
DECONTAMINATION SYSTEM

Figure 1

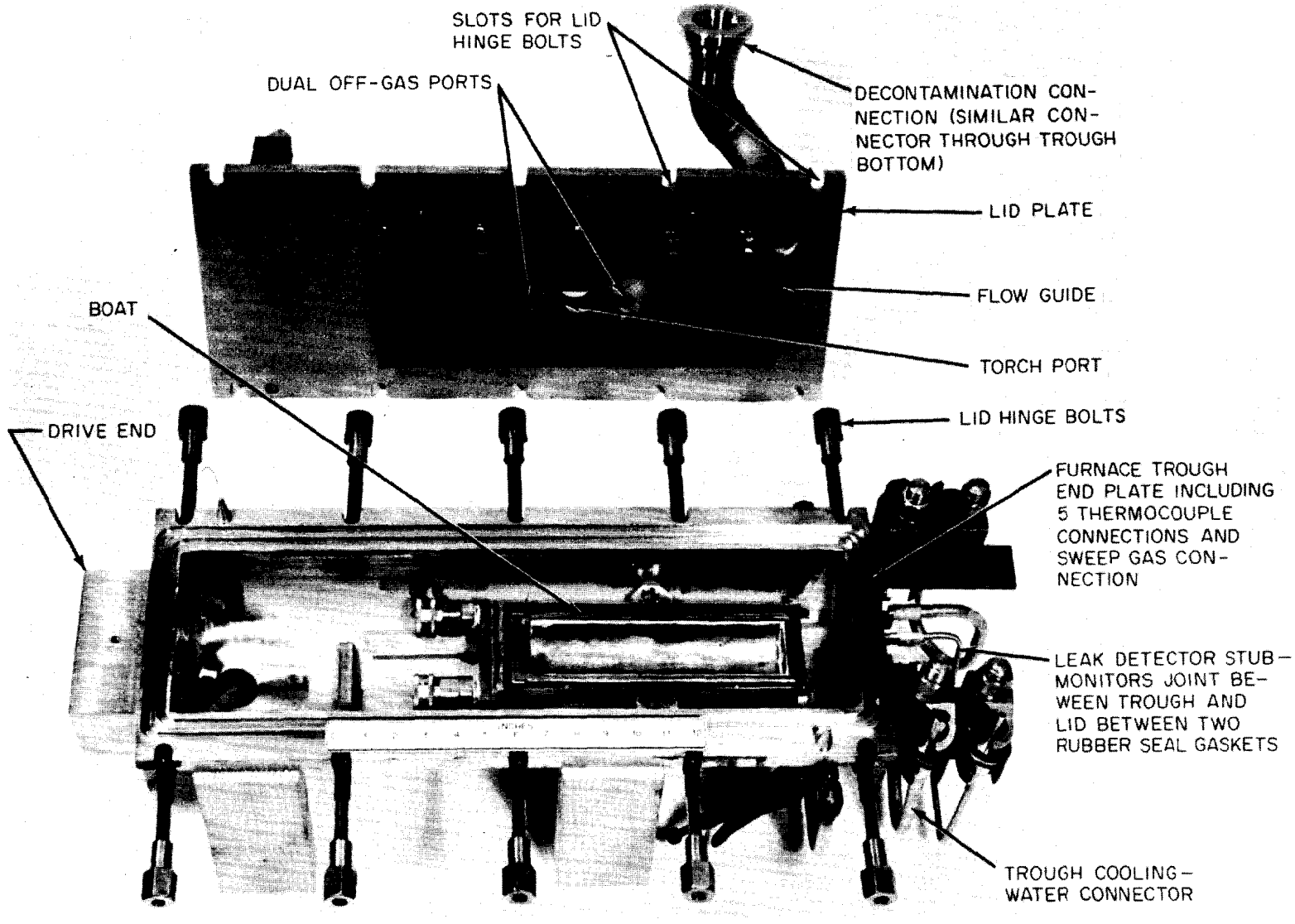
SLOTS FOR LID HINGE BOLTS
DUAL OFF-GAS PORTS
DECONTAMINATION CONNECTION (SIMILAR CONNECTOR THROUGH TROUGH BOTTOM)
LID PLATE
FLOW GUIDE
BOAT
TORCH PORT
LID HINGE BOLTS
DRIVE END
FURNACE TROUGH END PLATE INCLUDING 5 THERMOCOUPLE CONNECTIONS AND SWEEP GAS CONNECTION
LEAK DETECTOR STUB-MONITORS JOINT BEWEEN TROUGH AND LID BETWEEN TWO RUBBER SEAL GASKETS
TROUGH COOLING-WATER CONNECTOR

suitable operating conditions to achieve essentially complete UO_2 melting, to find a suitable liner for the water-cooled copper melt boat, and to establish the configuration of the flow guide baffle placed above the boat to help channel vapors from the melt into the outlet off-gas pipes from the furnace. A great many interdependent variables affect the torch performance. One is the plasma gas; any inert gas can be used, but changing gases can affect such factors as flame shape and momentum. Torch current, rate of specimen feed under the flame, and spacing from the torch nozzle to the specimen all strongly influence the rate and degree of melting. A helium feed rate of 65 cfh, a spacing of 2 3/4 in., a current of 650 amp at 40-45 volts, and a feed rate of 2 in./min were chosen. Under these conditions, approximately 90% of the fuel pellet is melted rapidly and approximately 3% of the material is vaporized. A total of slightly over 7 hr of successful torch operation has been accumulated with no evidence of deterioration of the torch. (This is equivalent to at least 40 pilot plant runs.

The solution to the boat liner problem proved surprisingly simple. Originally it was proposed to use ceramic liners, and trial liners were prepared by the ceramics group of the Y-12 Technical Division. Both green and fired liners shattered under the severe temperature gradient produced by the plasma torch, and it was decided that ceramic liners were probably not suitable. A trough of tantalum sheet, separated from the boat by tantalum spacers, was then tried, and it worked satisfactorily.

The flow guide configuration also received attention during the development studies. The guide is a baffle designed to direct vapors leaving the melt to the outlet line from the furnace so that they will be conducted to the model containment vessel. The limitation imposed by the system was that it must not interfere with boat movement. A large central opening was required to provide access for the plasma torch and to leave an unobstructed view of the melt through two viewing ports. The flow guide preferably was to be simple and inexpensive enough to permit it to be destroyed during analysis after being used for one run, since a high degree of contamination was expected. The guide adopted is in the form of a simple hood made by bending down the sides and ends of a tantalum sheet and cutting openings for the torch and viewing ports. Stainless steel and Inconel guides were tried, but severe melting near the torch always occurred. Warping, cracking and embrittlement were encountered on some of the early tantalum flow guides, but it was found that a saw cut from the flame hole to the side of the guide allowed the guide to expand and contract without excessive restraint.

Furnace tests in the pilot plant will be required to obtain data on the effectiveness of transfer of fission products to the model containment vessel.

EXPERIMENTAL PROGRAM

The experimental program as presently conceived comprises three stages: stable iodine experiments, radioiodine experiments, and mixed fission product experiments.

In the first series of experiments stable iodine will be released in the presence of UO_2 by the following procedure: A simulated fuel element will be made by inserting several 3/4-in.-OD, 3/8-in.-ID, 1-in.-long, sintered UO_2 pellets in a tube of either type 304 stainless steel or Zircaloy-2. The cavity in the pellets will be packed with a mixture of UO_2 powder and iodine crystals containing the desired amount of iodine for the experiment to be performed. The fuel element will be sealed, placed in the furnace and melted with the plasma flame. The volatile materials from the melt will be directed into the model containment vessel. Samples to be collected will include the material

in a diffusion channel attached to the transfer line connecting the furnace and model containment vessel, coupons at several locations in the vessel, air taken at different times at one location in the vessel, and fallout taken at one location at different times. The diffusion channel samples will provide information on the size of the submicron particles with which iodine may be associated. Iodine will be determined by activation analysis. The residue in the melt boat, deposits in the furnace, and deposits in the transfer line will also be analyzed.

A series of experiments of this general type is planned. In these it is planned to investigate the effect of atmosphere surrounding the melt (helium, air, and steam), cladding material (stainless steel or Zircaloy), gas flow rates, containment vessel atmosphere, torch operating parameters (current and exposure time as influenced by rate of moving the fuel element under the flame), and location of release inside the model containment vessel (to be achieved by extending the transfer line inside the vessel to the point of concern). Subsequent runs will be more specifically concerned with the effectiveness of attenuation processes which may be introduced within the containment volume, such as water spray, steam spray, and recycle filtration, as well as various particle-agglomeration techniques.

The use of stable iodine appears to have several advantages and, of course, a few disadvantages. The greatest advantage is that no radiation problems will be encountered in runs of this type, which should expedite carrying out experiments and provide for frequent experiments. A second advantage is that relatively large quantities of iodine may be used, so that it will be possible to simulate the release of the entire iodine inventory of a large power reactor into its containment vessel.[1] The most obvious disadvantage is that there may be some radiation dependent phenomena which would affect the transport behavior of iodine. The form of the iodine entering the furnace is subject to question, as well as the possibility of leaving an iodine residue in the containment vessel that would influence the results of subsequent runs. (The vessel will be decontaminated as effectively as possible between runs.)

After completing work with stable iodine, it is planned to make a series of runs with I^{131}, both carrier free and containing varying amounts of I^{127} carrier. These runs will be intended primarily to investigate the effect of very low concentrations of iodine on its behavior. It will be possible to cover the range from the iodine inventory contained in a fairly low-level mixed fission-product experiment to the simulated release of the iodine inventory of a large power reactor core.

Ultimately, the pilot plant will be used to melt specially irradiated UO_2 fuel elements. It will be possible to work with fuel elements containing up to 1000 curies of fission products. It is expected that a similar sampling program to that outlined for iodine experiments will be followed. It is anticipated that the boat residues, the transfer line and diffusion channel, and the decontamination solutions originating in the furnace and model containment vessel will be analyzed for U, I, Te, Sr, Ba, Cs, Zr, Ru, and Ce. The deposition coupons, fallout samples, and airborne dust samples will probably be analyzed only for gross gamma activity. This decision is based both on economics and on the expectation that many of the samples will not contain encough material to permit a radiochemical analysis. Techniques for computer "unfolding" of gamma spectra are being investigated. If a suitable technique is found, gamma spectroscopy will be used to analyze many of the samples.

The mixed fission product runs have not been planned in detail as yet, but many sets of experimental conditions are being considered. It is expected that the iodine experiments will enable some of the variables to be eliminated and will also cause some of the sampling procedures to be modified. These

runs will be scheduled to get the most urgently needed data as soon as possible.

References

1. M. H. Fontana and C. G. Lawson, "NSPP Semiannual Progress Report, June 30, 1962", ORNL-3319, pp. 51-62.

2. M. H. Fontana and L. F. Parsly, "NSPP Semiannual Progress Report, December 31, 1962", ORNL-3401, pp. 57-60.

3. M. H. Fontana and C. G. Lawson, "NSPP Semiannual Progress Report, June 30, 1962", ORNL-3319, pp. 51-62.

4. L. F. Parsly, "NSPP Hazards Summary Report", ORNL-TM-683, (to be issued).

5. P. P. Holtz, "Plasma Torch Development", ORNL-TM-687, (to be issued).

THE TURBULENT TRANSPORT AND DEPOSITION OF PARTICLES WITHIN VERTICAL TUBES

G. A. Sehmel
General Electric Company
Hanford Atomic Products Operation
Richland, Washington

ABSTRACT

Theories are reviewed which predict particle deposition under turbulent flow conditions in vertical tubes. Theoretical predictions are compared with experimental deposition in 58-foot lengths of 1-1/4- and 3-inch-diameter tubing. Theories prove useful in predicting deposition; however, reentrainment must be considered as a separate factor when higher depositions are predicted. For 3-inch tubes deposition at low reduced stopping distances is higher than predicted. A possible explanation is that for these conditions a transition exists to a deposition mechanism not described by the postulated theory.

INTRODUCTION

The transport of airborne particles to and deposition on surfaces is of considerable importance in many systems in industry, meteorology, and in the life sciences. Deposition of radioactive particles in closed conduits, on structures, on vegetation and on terrain is of great significance in evaluating and predicting the radiological consequences at the point of interest. One special case is the deposition of particles in lung passages. Another is the plate-out of particulate material on reactor containment vessels and passages through reactor components during a serious reactor incident involving the release of fission products. Another case of significance is the deposition of particles in systems designed to transport waste gases containing radioactive particles, either to points of release to the atmosphere or to a sample collector. The deposition and retention of particles on exhaust ducts and sampling lines may materially influence the assessment of the radiological safety of the gaseous release.

To accurately determine the significance of particle deposition in a given circumstance requires knowledge of the many parameters which control the behavior of particles in an air stream. The important variables are the velocity of the carrying gas and its dynamic fluid properties, the friction of the surfaces, or walls in the case of closed conduit, and the inertial properties of the particles themselves.

Laminar, transition, and turbulent flow must be considered. Attention is restricted herein to turbulent flow because of the marked deposition resulting

for particles moving in a turbulent stream.

Theories have been proposed to predict the turbulent transport of particles to vertical walls. Friedlander and Johnstone[1] developed three equations to predict particulate deposition in vertical tubes. Each equation is applicable to particle sizes within a range of reduced stopping distances, S^+(*). Reasonable agreement between predicted and experimental deposition for particles from 0.8 to 2.6 microns in diameter in tubes from 0.5 to 2.5 cm in diameter were obtained for reduced stopping distances of 0.2 to 10.

In contrast, Owen[2] considered the general cases of particulate deposition from a turbulent air stream to all horizontal and vertical surfaces. Equations to predict deposition were developed which are independent of particle size. These two theories have been reviewed by Chamberlain[3] who obtained an order of magnitude agreement between predictions from Owen's equations and for micron size particle deposition on grass.

Direct measurements of aerosol deposition as a function of particle size have also been reported by Postma and Schwendiman[4,5] for 2-, 4-, and 30-micron-diameter particles in conduits 1.38 to 2.64 cm in diameter. The data were correlated reasonably well as one curve.

Since the correlation was based on pointwise deposition measurements within a tube, the applicability of the data to a long tube was subsequently measured by FitzPatrick, Nielson, and Schwendiman[6] who measured the total deposition of zinc sulfide particles (Radium Corporation No. 2210) in a 60-foot length of 1/2-inch-diameter tubing. The experimentally observed deposition agreed well with that predicted from Friedlander's and Johnstone's equations as well as with the correlations reported by Postma and Schwendiman. At depositions greater than 85 per cent, observed deposition was about 5 per cent less than predicted, presumably due to re-entrainment. The flow rates used corresponded to Reynold's numbers from 4000 to 10,000.

OBJECTIVE

The purpose of this study is to compare predicted with experimental total deposition for larger diameter tubes and for a greater range of Reynold's numbers than those previously reported. The turbulent deposition of zinc sulfide particles was measured in 58-foot (17.7 meters) long vertical tubes.

SUMMARY

The deposition of fluorescent zinc sulfide particles was measured in 1-1/4-inch- and 3-inch-diameter vertical tubes 58-feet long. The fraction deposited in the 1-1/4-inch tube ranged from 7 to 73 per cent over a Reynold's number range of from 6000 to 40,000. An average deposition of 6 per cent for the 3-inch tube was found with no significant variation within the experimental accuracy for flow rates from 4 to 35 cfm (Reynold's numbers of 1600 to 14,000).

All deposition data available are reviewed and compared with Friedlander's and Johnstone's theoretical relations. The values of the deposition ratio, K/V, are spread more widely when plotted against S^+ than when plotted against the correlation parameter used earlier by Postma and Schwendiman, but both curves have high correlation coefficients over most of the range of data.

Deposition in the 3-inch-diameter tube was significantly greater than predicted. This higher deposition is an indication of significant departure from a single deposition ratio for each low S^+ value for tubes of this diameter.

(*) All symbols are defined at end of report.

EXPERIMENTAL

The apparatus, shown schematically in Figure 1, consisted of 12-foot or shorter length of aluminum tubing held tightly together with short sections of rubber sleeves to form a continuous vertical tube. Two sizes of aluminum tubing were used: 1-1/4-inch-diameter with 0.049-inch wall (2.93 cm I.D.), and a 3-inch-diameter with 0.095-inch wall (9.68 cm I.D.). As shown, the particles were drawn through the tubes from a 50-gallon drum which served as a mixing chamber. A dust feeder[7] was used to introduce the particles into the mixing chamber at a constant rate.

Two samples were collected from the drum for each run. The first was a sample, C_o, collected immediately adjacent to the mixing chamber. Such a sample was collected to correspond to the quantity of aerosol drawn up into the long vertical tube. The second sample, C, was collected at the top end of the long vertical tube. For both cases, transitions on the filter holder permitted filtration of the entire air stream through 4-inch-diameter membrane filters.

The aerosol was zinc sulfide (Radium Corporation No. 2210) with a size distribution as sampled from the mixing chamber as shown in Figure 2. The lower end of this microscopically determined curve was extrapolated to data obtained from a Royco particle counter. Each run was approximately 20 minutes long with the particle feed rate controlled to yield a C_o filter collection of about 30 mg. The filters were dissolved in 14 ml acetone and the resulting mixture analyzed fluorometrically.

RESULTS

The deposition data obtained for the 1-1/4-inch tube are shown as a function of flow rates in Figure 3. Data for the 3-inch-diameter tube are not plotted since the total deposition was found to be 6 per cent and independent of flow rates for flows from 4 to 35 cfm. Although the latter deposition data were scattered, the deposition was significantly different from the average error of 1.7 per cent experienced in reproducing the C_o samples. For the 1-1/4-inch tube the Reynold's numbers were varied from approximately 6000 to 40,000; for the 3-inch tube, from approximately 1600 to 14,000.

DISCUSSION

The model used to describe turbulent particulate deposition is defined in terms of a deposition velocity.[1,4,5] For any particle size of a material, the deposition velocity is the quotient of the number of particles deposited per unit time per unit area of the wall divided by the volumetric average number of those particles per unit volume in the gas stream.

Friedlander and Johnstone[1] derived three expressions relating the deposition velocity, K, to S^+, the reduced stopping distance, the Fanning friction factor, f, and the average air velocity, V, in the tube. The three equations are for $S^+ \leq 5$,

$$\frac{K}{V} = \frac{f/2}{1 + \sqrt{f/2}\left(\frac{1525}{S^{+2}} - 50.6\right)}, \qquad (1)$$

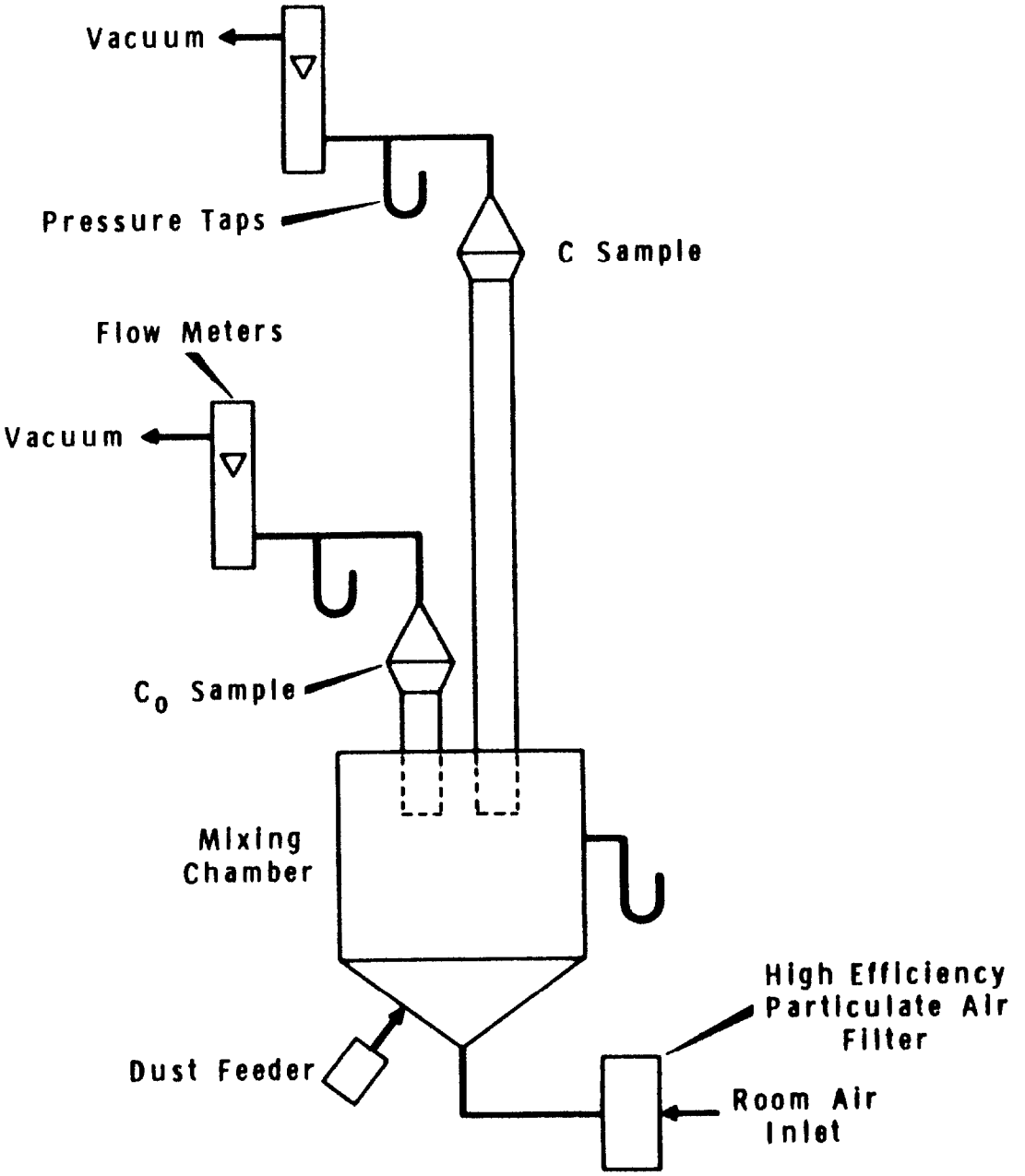

FIGURE 1: FLOW CHART OF DEPOSITION SYSTEM

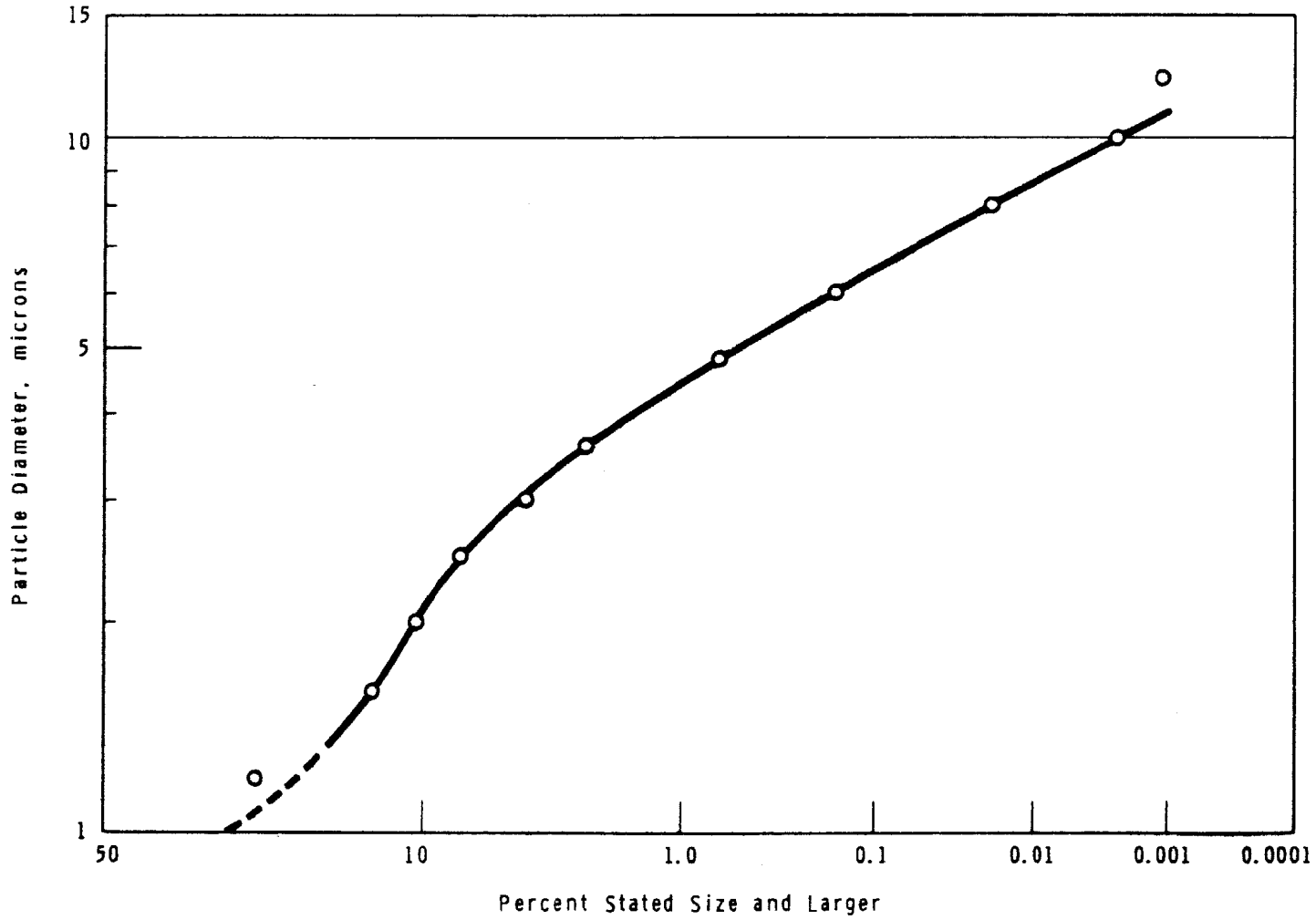

FIGURE 2: PARTICLE SIZE DISTRIBUTION ENTERING VERTICAL TUBE

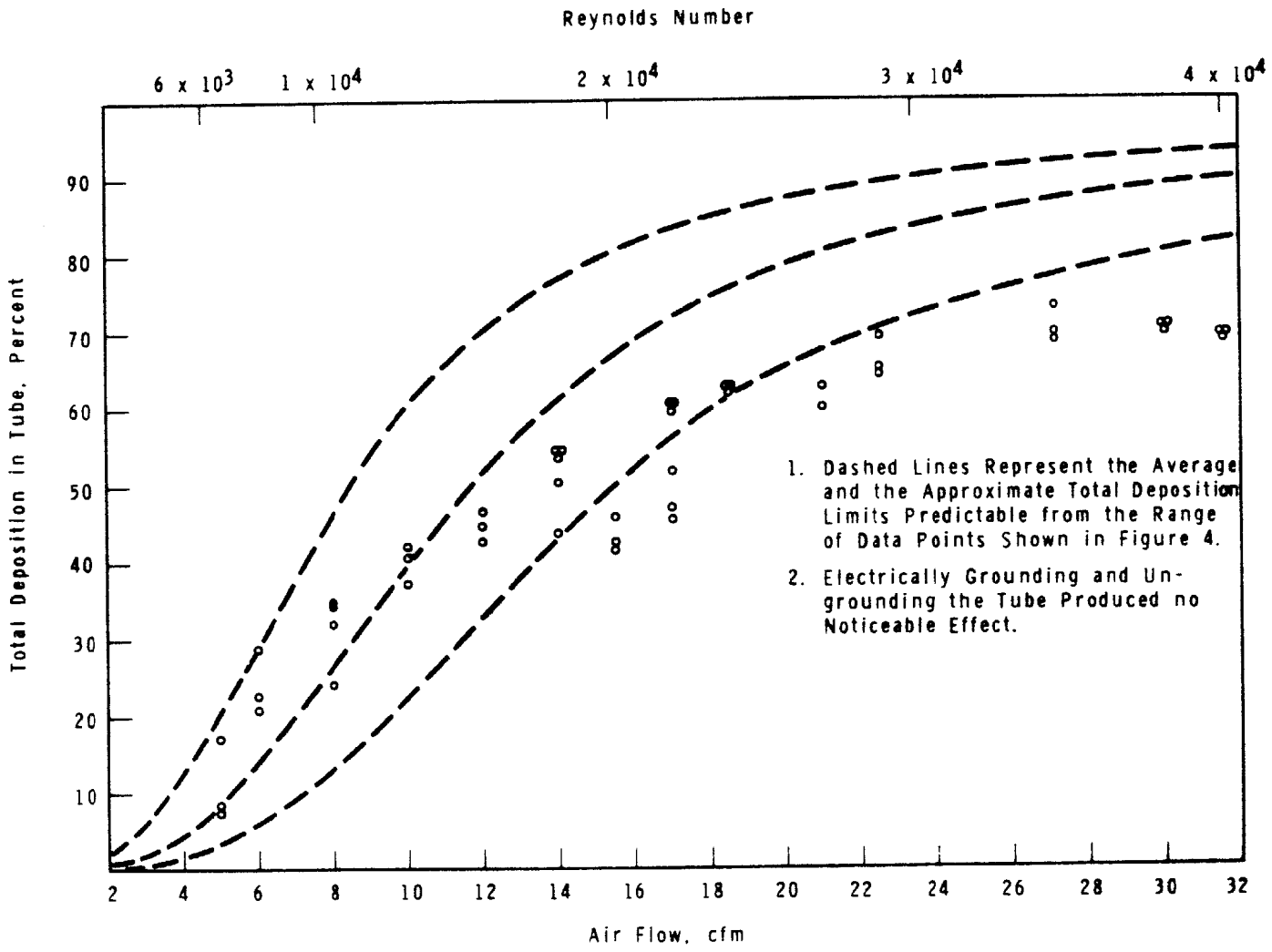

FIGURE 3: PERCENT DEPOSITION OF ZnS PARTICLES IN A 17.7 METER (58 Foot) LENGTH OF 2.93 cm I.D. (1-1/4 Inch O.D.) TUBING

for $5 < S^+ < 30$,

$$\frac{K}{V} = \frac{f/2}{1 + \sqrt{f/2}\left[5 \ln\left(\frac{5.04}{S^+/5 - 0.959}\right) - 13.73\right]} \tag{2}$$

and for $S^+ > 30$,

$$\frac{K}{V} = \frac{f}{2} \tag{3}$$

Friedlander and Johnstone chose as the independent variable the dimensionless deposition ratio, K/V.

The data for deposition in tubes available to date have been plotted in Figure 3. The solid line is a plot of Equation (1) for average flow and particle conditions ($S^+ < 5$) selected to best fit the bulk of the data.

For S^+ between 5 and 30 the experimental K/V falls about a factor of two higher than the values predicted by Equation (2).

For S^+ greater than 30, for the few experimental points in this range, Equation (3) predicts much lower values than observed. Equation (3) predicts a decreasing K/V with increasing S^+ in this range, yet the experimental data show no indication of a lower K/V. By modifying Equation (3) empirically to

$$\frac{K}{V} = \frac{f}{2}\left(\frac{S^+}{30}\right), \tag{4}$$

a reasonable fit was obtained for points at $S^+ = 30$ and greater.

The expected fractional deposition of the polydisperse zinc sulfide aerosol in the 1-1/4- and the 3-inch tubes was calculated with an IBM 7090 computer from Equations (1) and (2), and from the empirically modified Equation (3), the particle size frequency in Figure 2, and by using the deposition equation[4,5]

$$\frac{C}{C_o} = e^{-4\left(\frac{K}{V}\right)\left(\frac{L}{D}\right)} \tag{5}$$

The deposition observed in the 1-1/4-inch tube is shown in Figure 3. The predicted total deposition using a range of 0.3, 1.0, and 3.5 times the K/V values from Equations (1), (2) and (4) are shown as the three dashed lines. At the higher flow rates the calculated fractional deposition is greater than the experimental fractional deposition. Below a flow rate of approximately 10 cfm, the experimental total deposition is within the range that is predicted from the deposition velocity data shown in Figure 4. The most probable explanation of these differences is that particle re-entrainment becomes appreciable at the higher flow rates.

For the 3-inch-diameter tube, the predicted total deposition is a fraction of 1 per cent. In contrast, the experimental deposition was much greater, being constant at 6 per cent. This constancy may be interpreted to mean that within experimental accuracy the deposition ratio, K/V, is constant for all S^+

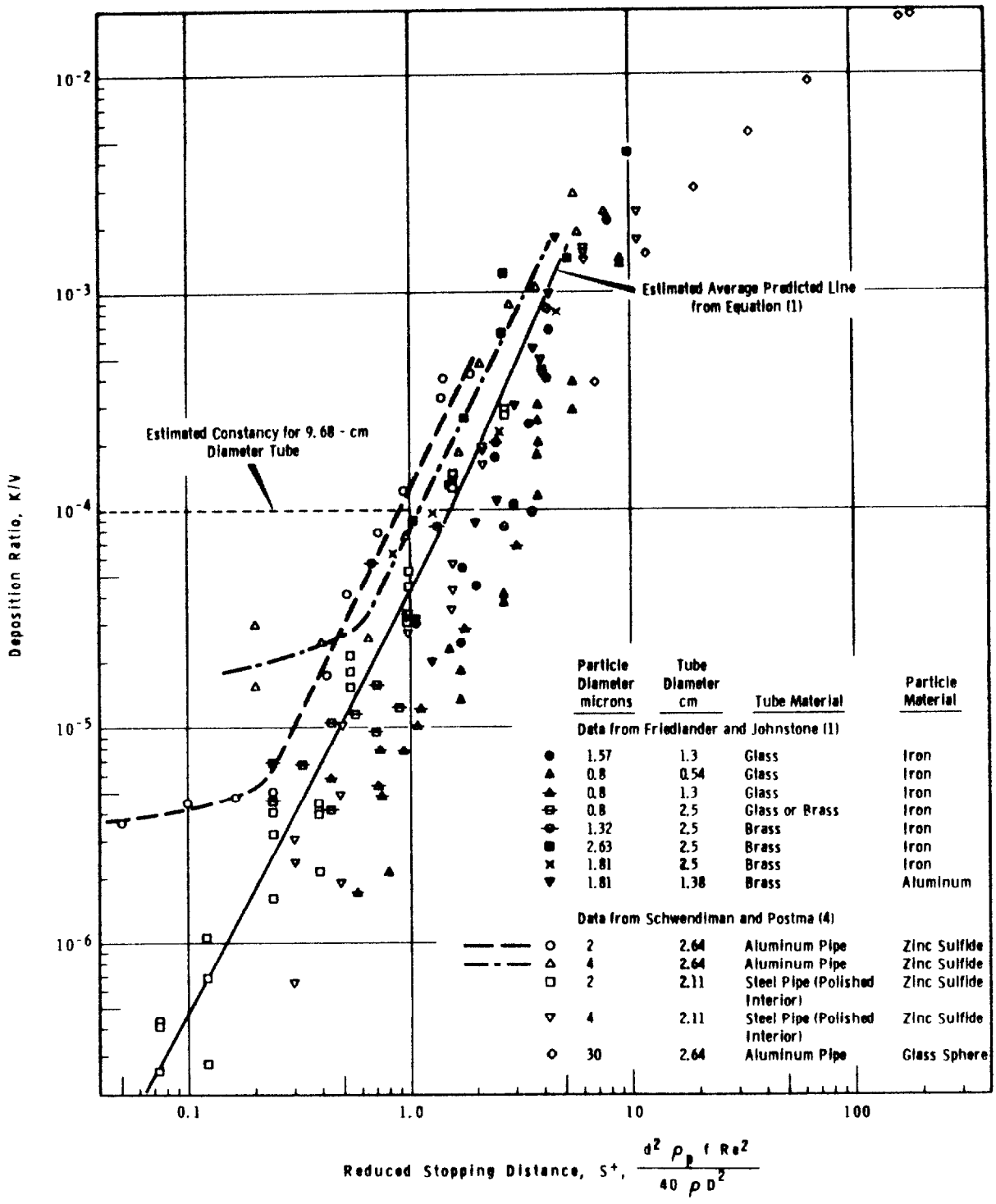

FIGURE 4: DEPOSITION RATIO AS A FUNCTION OF THE REDUCED STOPPING DISTANCE

values in this flow range for the 3-inch tube. Using Equation (5), K/V is calculated to be constant at 1×10^{-4} for the 3-inch-diameter tube for S^+ values between approximately 0.02 to 1.0. This conclusion is shown as the horizontal dashed line in Figure 4.

This conclusion is significant when considered together with Postma's and Schwendiman's data[4] for 2- and 4-micron-diameter zinc sulfide particles in a 2.64-cm-diameter tube. The data for these particles are represented in Figure 4 by the open triangles and circles, and the data are approximated by the two curved dashed lines. These dashed lines are indicative of the tendency for the deposition ratio, K/V, to be constant as S^+ decreases. This tendency supports the conclusion that was made for the 3-inch-diameter tube.

In addition, when the deposition of 0.004-micron-diameter particles[8] and the retention of iodine vapor[8,9,10] in tubes are considered, the conclusion is reasonable. Although the mechanism for deposition of these substances is different than for micron sized particles, the concentration gradient of these substances along the tube wall may be assumed to be approximated by a single exponential function. In this case, Equation (5) can be used to calculate an order of magnitude "pseudo" deposition ratio, K/V. The resulting range for the "pseudo" K/V is approximately 10^{-4} to 1. Also, these substances would have reduced stopping distances approximately 10^{-8} and smaller. These "pseudo" K/V values are considerably greater than the K/V observed for values of S^+ ranging from about 0.1 to 1. This is indicative of the fact that for some range of S^+ values, the value of K/V must increase as S^+ decreases. The data for the 2- and 4-micron-diameter tube are an indication that in this range of S^+ values, K/V is trending toward higher values than predicted by the overall correlation of the data.

CONCLUSIONS

Deposition in vertical tubes may be reasonably well predicted from correlations of Friedlander and Johnstone, and Postma and Schwendiman, for 1- to 10-micron-diameter particles for tubes with diameters of the order of 1/2-inch. If the predicted deposition is greater than approximately 85 per cent, re-entrainment will probably produce a lower than predicted total deposition. For larger diameter tubes, deposition can be predicted, but with less accuracy. The predicted deposition for 1-1/4-inch tubes should be adjusted using Figure 3 as a guide in estimating re-entrainment. Deposition in 3-inch tubes will be appreciably greater than predicted, although still a relatively small fraction for many particles and velocities and reasonable lengths of tubes.

The data suggest that for some tube diameters and for quite low S^+ values, K/V approaches a constant value or at least decreases at a much slower rate with decreasing S^+ than the correlations would predict. This divergence has not been satisfactorily explained but may show a transition to a deposition mechanism not accounted for in the turbulence theory used by Friedlander and Johnstone.

Should the transition be one from lower to higher deposition with decreasing S^+, after passing through a minimum this transition would be consistent with a postulate of a particle of sub-micron size which is least effectively removed in high-efficiency filters.[11,12,13]

NOMENCLATURE

C = volumetric average concentration, particles of a particular size and material per cc downstream in the tube

C_o = volumetric average concentration, particles of a particular size and material per cc upstream in the tube

d = particle diameter, assuming spherical shape, cm

D = tube diameter, cm

f = Fanning friction factor, dimensionless

K = deposition velocity, cm/min

L = distance from upstream to downstream points of interest in the tube, cm

m = mass of particle, gm

S = stopping distance, $\frac{m\ v_o}{3\pi\mu d}$, cm (Ref. 1)

S^+ = reduced stopping distance, $\frac{SV\rho}{\mu}\sqrt{f/2}$, dimensionless

T = gas temperature assumed to be constant at 70 F for all data

v_o = assumed equal to root mean square of the radial component of the fluctuating gas velocity, taken as $0.9\ V\sqrt{f/2}$ (Ref. 1)

V = average gas velocity, cm/min

μ = gas viscosity, poises

ρ = gas density, grams per cc

ρ_d = particle density, grams per cc

REFERENCES

(1) S.K. Friedlander, H.F. Johnstone. "Deposition of Suspended Particles from Turbulent Gas Streams," Ind. Eng. Chem., vol. 49, p. 1151, 1957.

(2) P.R. Owen. "Dust Deposition from a Turbulent Airstream," Int. J. Air Water Pollution, vol. 3, p. 8. 1960.

(3) A.C. Chamberlain. Transport of Particles Across Boundary Layers, AERE-M-1122, Great Britain, November 1962.

(4) A.K. Postma, L.C. Schwendiman. Studies in Micromeritics -- Particle Deposition in Conduits as a Source of Error in Aerosol Sampling, HW-65308, May 12, 1960.

(5) L.C. Schwendiman, A.K. Postma. Turbulent Deposition in Sampling Lines, HW-SA-2286, September 27, 1961 and TID-7627, pp. 127-136. October 1961.

(6) V.F. FitzPatrick, S.M. Nielson, L.C. Schwendiman. Particle Deposition in a One-Half Inch Conduit, HW-73404, June 8, 1962.

(7) B.M. Wright. "A New Dust-Feed Mechanism," J. Sci. Inst., vol. 27, p. 12. 1950.

(8) W.E. Browning, Jr., R.D. Ackley. "Particle Size Distribution of Radioactive Aerosols by Diffusion Coefficient Measurements," Nuclear Safety Program Semiannual Progress Report for Period Ending June 30, 1962, ORNL-3319, pp. 44-50. August 1962.

(9) J.D. McCormack, Unpublished Data, General Electric Company, Hanford Atomic Products Operation, 1963. (Personal Communication).

(10) M.N. Ozisik. An Analytical Model for Fission-Product Transport and Deposition from Gas Streams, ORNL-3379. Oak Ridge National Laboratory, August 1963.

(11) J.J. Fitzgerald, C.G. Detwiler. "Optimum Particle Size for Penetration through the Millipore Filter," Arch. Ind. Health, vol. 15, p. 3. 1957.

(12) W.J. Megaw, R.D. Wiffin. The Efficiency of Membrane Filters, AERE-R-4211, Great Britain, January 1963.

(13) W.E. Browning, Jr., R.D. Ackley. "Diffusional Characterization of Millimicron Radioactive Aerosols with their Removal from Reactor Gases," Nuclear Safety Semiannual Progress Report for Period Ending December 31, 1962, ORNL-3401, pp. 44-49. March 1963.

THE VALIDITY AND USE OF SUTTON'S EQUATION AS APPLIED TO STACK EFFLUENTS

E. C. Ashley and B. Kalmon
Goodyear Atomic Corporation

ABSTRACT

A simple determination of the maximum ground level concentrations of radioactive stack gases can be made by using the basic Sutton equation. Using simple assumptions, a correlation coefficient of 0.72 at a 95% confidence level was found between the calculations and sample results.

INTRODUCTION

In the gaseous diffusion process, a point is reached where the desired UF_6 is separated from light gaseous contaminants which have been introduced into the system either intentionally or unintentionally. These gaseous contaminants, commonly referred to as "lights," can be separated in the same manner as are the UF_6 isotopes. The contaminating "lights" all have molecular weights lower than that of UF_6 and are consequently separated more readily than are the UF_6 isotopes. An additional purge cascade is utilized beyond the UF_6 withdrawal point to further separate the "lights" from any UF_6 that might be carried along beyond this point. The "lights" include such gases as nitrogen, dry air, freon, etc. The "lights" pass from the purge cascade through alumina traps to remove the remaining traces of UF_6 and are finally exhausted to the atmosphere.

These alumina traps must be replaced periodically to recover the sorbed UF_6 and to restore the trapping system efficiency which degenerates in normal use due to plugging and depletion of the trapping chemicals.

In 1960, a study was made to determine the cost of frequent trap changes versus the value of the recovered enriched uranium. The study indicated that estimated annual savings in excess of $30,000 could be realized if the traps were changed only when the UF_6 concentration beyond the traps exceeded a fixed value. Health physics considerations presented the only potential objection to this proposal. As a result, health physics and meteorological studies relating to the hazards of this proposal were made.

HEALTH PHYSICS CONSIDERATIONS

A preliminary calculation of the uranium concentration in the stack gases indicated it would be on the order of 10^5 times the permissible level as indicated by the uranium

alpha activity for continuous off-site conditions. The allowable concentrations are 20×10^{-12} μc/cc on site and 2×10^{-12} μc/cc off site. Because of this high stack concentration, more detailed calculations were made to estimate the effects of atmospheric dilution.

The maximum "fall-out" concentration was calculated from Sutton's equation to occur from 485 to 4480 feet from the vent stack, assuming a constant wind velocity of 5.37 mph (the average wind velocity on plant site). The 4480-foot distance practically coincides with the perimeter road in the prevailing wind direction and is within the plant boundaries in all the other usual wind directions. Data previously collected for other considerations indicate that the maximum long-range effective "fall-out" distance agrees with the 485-foot value. Of significant consideration is the fact that at this 485-foot distance, the maximum permissible concentration is ten times higher than that for "off-site."

Calculations indicate the maximum uranium alpha activity to be approximately 14% of the off-site limits. A study of the past weather records shows that the wind is in the prevailing direction about 20% of the time; this is a safety factor not considered.

METHOD OF CALCULATION

All calculations were made from the basic Sutton equation for gases diffusing in the atmosphere. It was assumed that the stack effluent is, for all practical purposes, a gas.

The Sutton equation[1] used in the computation is given by:

$$\chi = \left(\frac{2Q}{\pi C^2 \bar{u}\, x^{(2-n)}}\right) e^{-H^2/C^2 x^{(2-n)}}$$

where: χ = ground level concentration (in grams per cubic meter)

Q = emission rate (in grams per second)

H = stack height (in meters)

x = distance downwind from stack (in meters)

C = diffusion coefficient dependent on wind velocity and stability parameter

$\bar{u}$ = average wind velocity (in meters per second)

n = stability parameter

The stability parameter, n, has the following general values:

Stability Condition and Temperature Profile	n
Unstable. Generally during sunny days; "Looping" plumes.	0.20
Neutral. "Coning" plumes.	0.25
Stable. Mild to strong inversion; "Fanning" plumes. Generally happens at night or early autumn mornings.	0.33

The distance (in meters) corresponding to the maximum concentration, using the Sutton equation, is expressed as follows:

1. Meteorology and Atomic Energy. Washington, D.C., U.S.G.P.O. 1955. p. 47.

$$x_{max} = \left(\frac{H^2}{C^2}\right)^{1/(2-n)}$$

Calculations were made as to the effect of varying stack height and wind velocity. The following tables show these effects:

Table I

EFFECT OF STACK HEIGHT ON MAXIMUM CONCENTRATION
(CONSTANT WIND VELOCITY OF 5.37 MPH)

Stack Height	Percent of Maximum Allowable Concentration at Location of Maximum "Fall-Out"	
	On-Site	Off-Site
81.4 feet (24.8 meters) (present height)	1.4	14
91.8 feet (28.0 meters)	1.0	10
105.0 feet (32.0 meters)	0.8	8
114.7 feet (35.0 meters)	0.7	7

Table II

EFFECT OF WIND VELOCITY ON MAXIMUM CONCENTRATION
(STACK HEIGHT OF 81.4 FEET)

Wind Velocity (mph)	Percent of Maximum Allowable Concentration at Location of Maximum "Fall-Out"	
	On-Site	Off-Site
3.35	2.2	22
5.37 (actual average)	1.4	14
11.18	0.7	7
20.00	0.4	4

The results shown in Table I indicate that an apparent advantage would be gained if the stack height were increased. However, an increased stack height would tend to bring the location of the maximum concentration off plant site, thus decreasing the maximum allowable concentration by a factor of ten. Therefore, because of this situation there would be no advantage to increasing the stack height.

Included in this paper are curves illustrating the effect of stack height and wind velocity on the maximum uranium alpha concentration (Figure 1), and, for different stability parameters, the relationship of stack height and wind velocity to the location of maximum fall-out (Figure 2).

From health physics considerations the computations showed that frequent alumina trap changes could be eliminated with a reasonable safety margin. However, due to the uncertainties of meteorological and operational conditions, it was obvious that special particulate samples should be collected and studied as an additional safeguard against excessive fall-out.

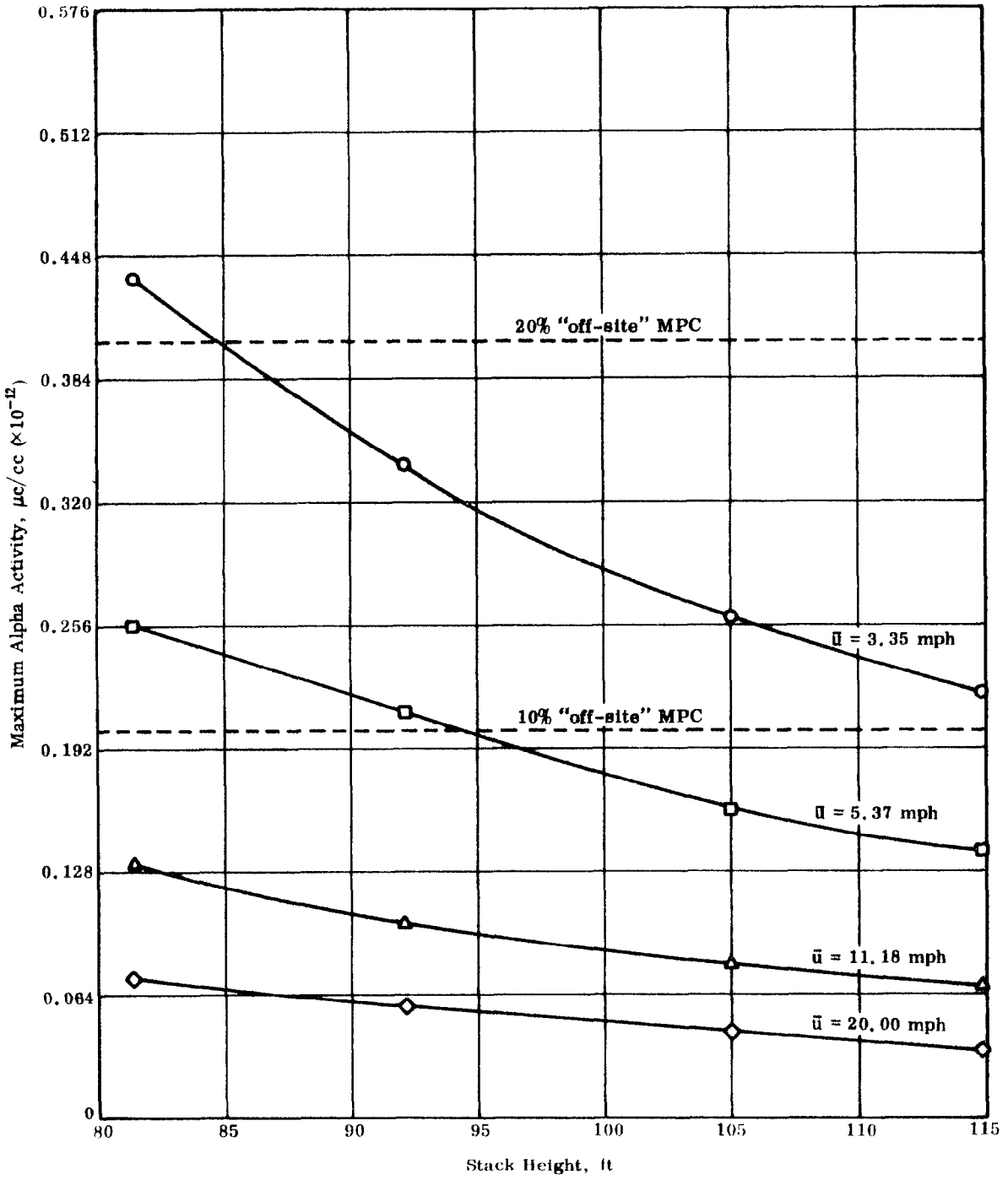

FIG. 1. EFFECTS OF STACK HEIGHT AND WIND VELOCITY

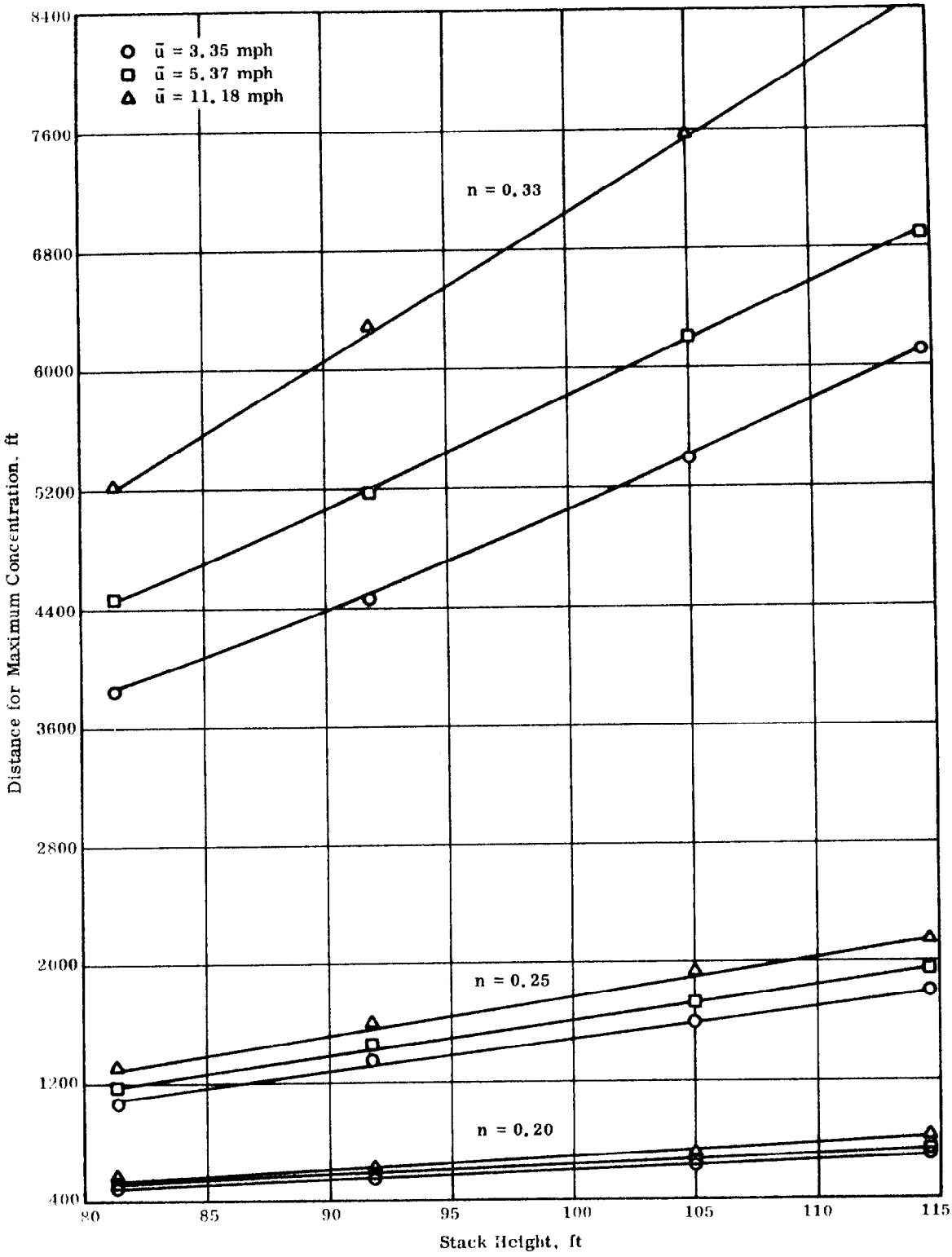

FIG. 2. EFFECTS OF STACK HEIGHT, WIND VELOCITY, AND STABILITY PARAMETER ON DISTANCE FOR MAXIMUM CONCENTRATION

SAMPLING PROGRAM

A daily sample was collected on each scheduled workday from September 14, 1960, to the end of that year. For the month of January, 1961, the sampling frequency was changed to twice a week. During the study 85 samples were collected. The data are presented in Table III. The samples were collected in the approximate vicinity of the expected maximum concentration based on the prevailing weather condition at the time of sampling.

SAMPLING RESULTS

The individual results were compared to the value of the maximum concentration calculated using the appropriate wind velocity and stability parameter at the time of sampling. The sample results were placed in groups of ten consecutive samples. A plot of the average of groups of ten measured results versus the corresponding average calculated values is included as Figure 3. The coefficient of correlation was 0.72 ± 0.16 at the 95% confidence limit.

There are several factors that contribute to a low correlation coefficient; these are:

1. The limits of error and sensitivity were poor at the low measured counting rates.
2. The stack discharge was not continuous at a constant rate but fluctuated under wide values, as indicated by the space recorder charts. Also, there was no significant correlation between individual space recorder readings and uranium alpha activity collected on the samples at the corresponding times.
3. The calculations assumed that all the alpha activity originated from one vent stack. Consideration was given to determine the collective assay of all samples to determine the source of the uranium, but the amount of uranium collected on the filter papers was insufficient to make such an analysis.

Of the 85 samples collected, none exceeded maximum permissible concentrations at the sample location. All of the statistics and data refer only to the locations of maximum concentrations.

The statistical results are as follows:

1. The highest individual sample was 4.5×10^{-12} μc/cc. This is about 22% of the continuous "on-site" value.
2. The average measured value was 0.45×10^{-12} μc/cc or about 2.2% of the continuous "on-site" value. The average calculated value was 0.57×10^{-12} μc/cc, equivalent to 2.9% of the continuous "on-site" limit.

CONCLUSIONS

It is to be noted that the sampling program was carried out during the autumn and winter seasons (the samples were usually collected in the early morning); these seasons are probably the most unfavorable for venting due to the high frequency of inversion conditions during early morning hours. However, the over-all environmental air-borne alpha average, after the elimination of frequent alumina trap changes, was essentially the same as that prior to the new procedure. From the time of the initial studies through July, 1963, nearly 1000 routine particulate air samples have been collected both on-site

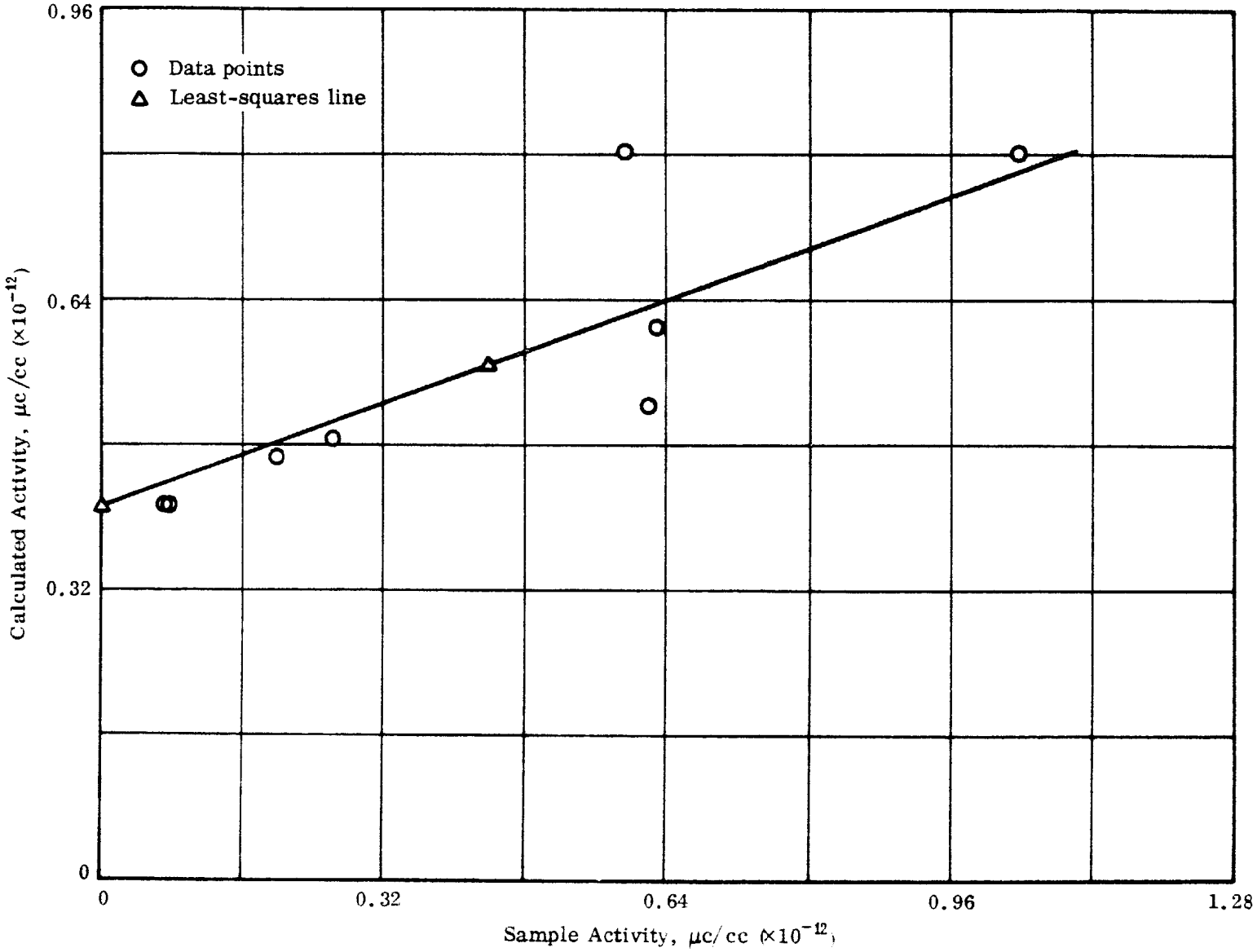

FIG. 3. COMPARISON OF CALCULATED AND SAMPLE RESULTS FOR 8 GROUPS OF 10

and off-site, with an average on the order of 1×10^{-13} $\mu c/cc$. Not one of these samples has exceeded the MPC of 2×10^{-11} and 2×10^{-12} $\mu c/cc$, respectively. Based on the calculated values and laboratory results, the reduction in frequency of the top purge alumina trap changes indicates that there is no significant health physics problem except under very unusual meteorological or operating conditions.

It is concluded that the basic Sutton equation can be used as a valid method for determining the ground-level concentrations of radioactive stack gases without the involvement of time-consuming air sampling procedures.

Table III

SAMPLING PROGRAM DATA

Date	Wind Velocity (mph)	Weather†	n	Results‡ Lab.	Results‡ Calc.	Average for Prior Ten Values‡ Lab.	Average for Prior Ten Values‡ Calc.
9-14-60	1	69	0.25	0.544	1.456		
9-15-60	2	69	0.25	1.920	0.736		
9-16-60	1	69	0.25	0.560	1.456		
9-19-60	3	34	0.33	0.240	0.480		
9-20-60	5	34	0.20	0.528	0.288		
9-21-60	4	34	0.33	0.240	0.368		
9-21-60	4	34	0.33	0.336	0.368		
9-22-60	2	49	0.25	0.160	0.736		
9-23-60	1	69	0.20	0.080	1.456		
9-26-60	2	69	0.33	1.328	0.736	0.592	0.816
9-27-60	2	39	0.33	0.336	0.736		
9-28-60	7	39	0.20	0.768	0.208		
9-29-60	2	49	0.33	1.152	0.736		
9-30-60	4	79	0.33	0.704	0.368		
10-3-60	8	69	0.33	0.608	0.176		
10-4-60	*	39	0.33	0.128	0.288		
10-5-60	1	49	0.33	0.656	1.456		
10-6-60	6	39	0.33	0	0.240		
10-7-60	5	69	0.20	0.944	0.288		
10-8-60	2	69	0.20	0.912	0.736	0.624	0.528
10-11-60	2	69	0.20	1.072	0.736		
10-12-60	1	49	0.25	1.810	1.456		
10-13-60	1	49	0.25	2.030	1.456		
10-14-60	2	49	0.33	0	0.736		
10-17-60	3	69	0.25	0.480	0.480		
10-18-60	4	79	0.25	0.160	0.368		
10-19-60	6	29	0.33	0.640	0.240		
10-20-60	15	68	0.20	0.064	0.096		
10-21-60	3	68	0.20	0	0.480		
10-24-60	12	68	0.20	0.064	0.013	0.640	0.624
10-25-60	1	69	0.33	0.960	1.456		
10-26-60	1	39	0.33	1.104	1.456		
10-27-60	3	39	0.33	0	0.480		
10-28-60	4	49	0.33	0.032	0.368		
10-31-60	13	29	0.33	0	0.011		
11-1-60	10	78	0.20	0.192	0.144		
11-2-60	7	78	0.20	0.256	0.208		
11-3-60	14	88	0.25	0.064	0.112		
11-4-60	5	39	0.33	0	0.288		
11-7-60	6	78	0.20	0.016	0.240	0.262	0.488
11-8-60	1	69	0.20	0	1.456		
11-9-60	10	28	0.33	1.580	0.144		
11-10-60	8	78	0.25	4.480	0.176		
11-11-60	1	49	0.33	2.880	1.456		
11-14-60	1	79	0.33	0.320	1.456		

Table III (Cont'd.)

SAMPLING PROGRAM DATA

Date	Wind Velocity (mph)	Weather†	n	Results‡ Lab.	Results‡ Calc.	Average for Prior Ten Values‡ Lab.	Average for Prior Ten Values‡ Calc.
11-15-60	11	78	0.25	0.112	0.128		
11-16-60	11	28	0.25	0.352	0.048		
11-17-60	9	69	0.33	0.256	0.160		
11-18-60	1	69	0.33	0.064	1.456		
11-21-60	1	49	0.33	0.304	1.456	1.0352	0.804
11-22-60	1	79	0.33	0.720	1.456		
11-23-60	12	38	0.20	0.016	0.128		
11-25-60	7	69	0.20	0.384	0.208		
11-25-60	7	69	0.33	0.112	0.208		
11-28-60	8	38	0.25	0.048	0.176		
11-29-60	20	78	0.20	0.480	0.080		
11-30-60	17	78	0.25	0	0.080		
12-1-60	10	78	0.25	0	0.144		
12-2-60	2	69	0.33	0.128	0.736		
12-5-60	1	79	0.33	0.064	1.456	0.197	0.467
12-7-60	10	78	0.25	0.128	0.144		
12-8-60	5	79	0.33	0.160	0.288		
12-9-60	2	69	0.33	0	0.736		
12-12-60	13	78	0.20	0.176	0.112		
12-13-60	2	69	0.33	0.032	0.736		
12-14-60	6	68	0.20	0.064	0.240		
12-15-60	11	38	0.20	0.160	0.128		
12-16-60	12	38	0.25	0.064	0.128		
12-19-60	7	79	0.33	0	0.208		
12-20-60	1	39	0.33	0	1.456	0.0784	0.416
12-21-60	12	78	0.25	0.080	0.128		
12-22-60	14	68	0.33	0.032	0.112		
12-23-60	7	69	0.33	0.016	0.208		
12-27-60	14	38	0.25	0.110	0.112		
12-28-60	5	69	0.33	0.144	0.288		
12-29-60	2	39	0.25	0.176	0.736		
12-30-60	7	39	0.25	0	0.208		
1-3-61	7	38	0.25	0.048	0.208		
1-5-61	2	69	0.20	0	0.736		
1-10-61	1	69	0.20	0.144	1.456	0.0752	0.416
1-12-61	1	69	0.20	0	1.456		
1-17-61	10	38	0.25	2.510	0.144		
1-19-61	5	58	0.25	0	0.288		
1-24-61	15	58	0.25	0.160	0.096		
1-31-61	1	79	0.25	0.208	1.456		

*Instrument failure; assumed wind velocity of 5 mph.

†Weather Code: 1 - Clear 2 - Rain 3 - Overcast 4 - Fog 5 - Snow 6 - Sunny 7 - Partly Cloudy 8 - Windy 9 - Calm

‡All values are reported in terms of 10^{-12} $\mu c/cc$.

INCINERATION OF WASTE CONTAMINATED OIL

K. E. Brandner, R. L. Bipes, and L. Williams
National Lead Company of Ohio
Cincinnati, Ohio

ABSTRACT

The accumulation of various organic liquid wastes contaminated with uranium is a problem at the National Lead Company of Ohio because of the potential of ground contamination and the high cost of maintaining these materials in storage. Of the various disposal methods investigated, incineration has proven to be the most successful. An oil burner is now operating on site capable of disposing of 400 to 700 fifty-five gallon drums of mineral oils and emulsions monthly. Uranium recovery from this process is virtually complete, and air contamination is held to acceptable levels.

INTRODUCTION

The Feed Materials Production Center (FMPC) located near Cincinnati, Ohio, and operated by the National Lead Company of Ohio for the AEC generates many types of uranium-bearing scrap. Most of this scrap is recycled to other parts of the process or is converted to a usable feed for other plants by the FMPC Scrap Recovery Plant. Until oil burning was developed, a method to dispose of waste organic liquids was not available. Hence, increasing quantities of these drummed materials accumulated on site. In addition to the hazard of fire from the flammable materials, the possibility of ground contamination from these uranium-contaminated wastes was also apparent. The drums containing these materials rust in the weather, acids in the wastes corrode the drums from within, and water in the drums sometimes freezes, causing many of these drums to leak. Redrumming is necessary as soon as possible after leakage is noticed to prevent contaminated wastes from washing into the storm sewer system and contaminating the small creek which runs through the site. The redrumming process was becoming increasingly costly, and was contributing, along with weathering, to losing the identification of the materials. It became necessary, therefore, to find a method to dispose of this backlog.

TYPES OF WASTE CONTAMINATED ORGANIC LIQUID

Although there are about 100 different classes of waste liquid organic materials stored at the FMPC, they can be divided into the following four principle types:

1. Mineral Oils

The typical contaminated mineral oil contains 2 g/l to 4 g/l of uranium, and is accompanied by a water phase which is usually lower in uranium content. Sludges which have settled to the bottom of some of these drums range from 5% to 30% uranium.

2. Emulsions

Uranium levels of 5 g/l to 10 g/l are typical for emulsions and for any accompanying water phase below the emulsion.

3. Waste Extraction Solvent

Uranium levels of 2 g/l to 4 g/l in the TBP-kerosene solvents are typical.

4. Wastes Rich in Chlorinated Hydrocarbon Solvents

This class of materials is not amenable to disposal by incineration since they would have to be carefully blended with other organic liquids before burning, and the decomposition products would be highly toxic.

EXPERIMENTAL WORK

Several attempts were made to adapt the Scrap Recovery Plant to burn contaminated oils with conventional burners or in existing plant equipment. However, the resulting process difficulties, high air dust levels, and the expense of required additional dust collection equipment made other approaches to a solution of the problem look more promising.

After several other methods of treatment were tried unsuccessfully, further investigation was made of the incineration of organic wastes. Mineral oil from which the water and sludge had been removed with a centrifuge was burned in a small pot to see if the ash could be retained in the pot and air contamination could be held to acceptable levels. It was shown that uranium recovery was virtually complete and air contamination was held to acceptable levels when the forced draft was controlled to assure visibly clean burning. Subsequent tests showed that the organic phase of emulsions broken with heat could be burned with the same results.

OPERATION OF THE OIL BURNER

The foregoing oil burning tests looked promising enough to justify the construction, early in 1962, of the oil burner presently in use (see Figure 1). Procedures for feed preparations and burning conditions were developed in the next few months, and additional feed preparation equipment found necessary to keep the burner supplied with burnable oil was installed.

The oil burner was started as a production unit operating 24 hours per day, five days per week in January, 1963. The process consists of four steps:

1. Cold or warm feed preparation

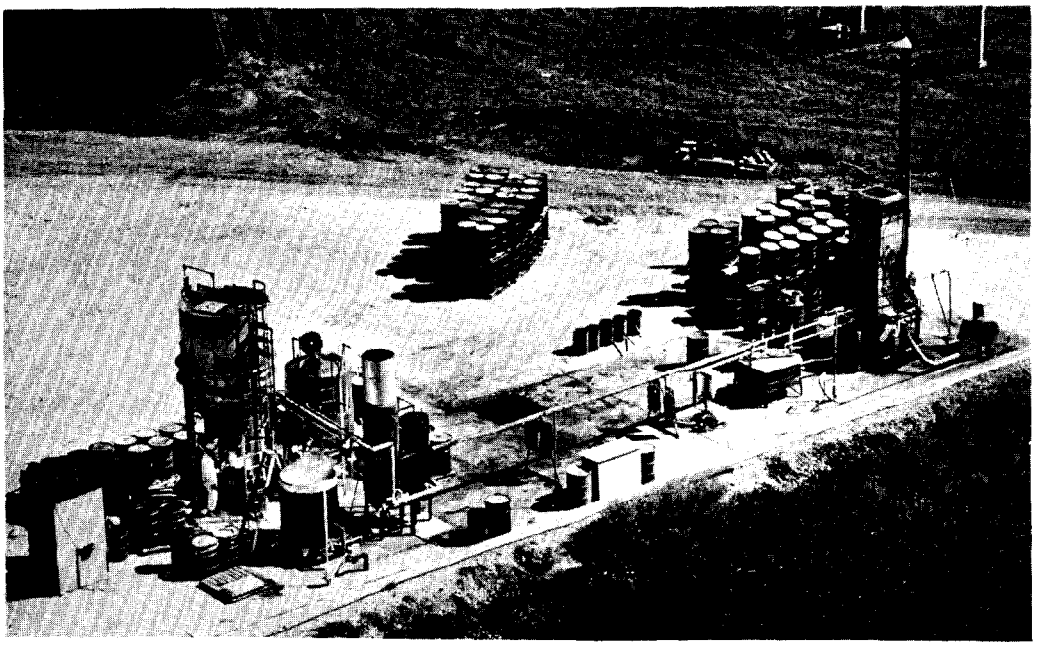

Figure 1 Photograph of Oil Burning Facility

BURNING WASTE CONTAMINATED OIL

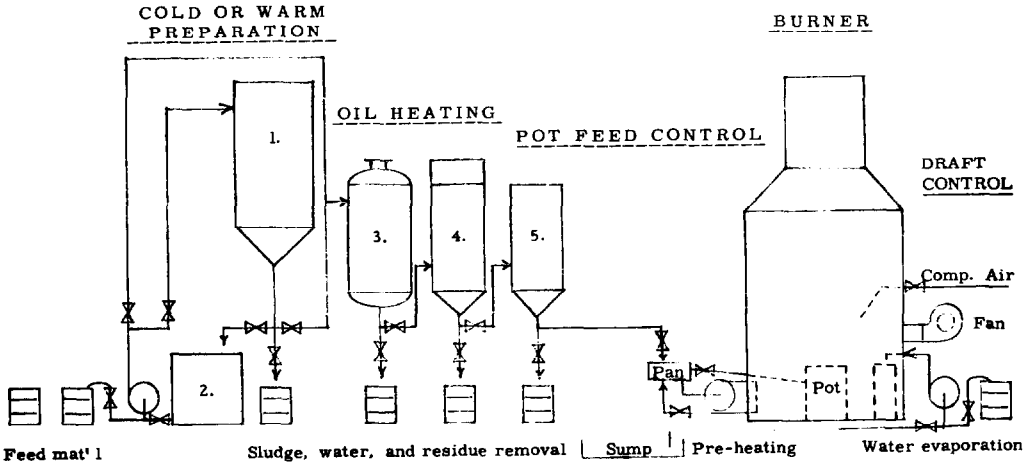

Figure 2 Schematic Drawing of Oil Burning Facility

2. Oil heating
3. Pot feeding
4. Oil burning

Each of the four steps will be discussed in relation to Figure 2, a schematic drawing of the facility.

COLD OR WARM FEED PREPARATION

Mineral Oils and Extraction Solvents:

Mineral oils are pumped from the feed drum to Tank 1, the receiving tank. Heavy sludges which would be difficult to pump are left in the bottom of the drum. Tank 1, with a capacity of 2700 gallons, serves as a surge tank and permits the blending of different feeds to supply a more consistent oil mixture to the burner. The tank is usually kept at ambient temperature; however, in winter, it is warmed to prevent freezing. Sludge and water are removed from the bottom of the tank and drummed separately. The oil is then ready for gravity feed through the rest of the system (bypassing Tank 2).

Emulsions:

Emulsions are also received in Tank 1. Any sludge or water is drained into drums as was described above. In these feeds, much of the water remains as an emulsion at this point in the process. The emulsion is then drained into Tank 2 and the pH is adjusted to 10 to 10.5 with Na_2CO_3 since it has been found that considerably more water is removed on subsequent heating if the material is slightly alkaline. The emulsion is then heated to nearly 212°F, and the effect of first heating is observed. If Tank 3 is nearly full, Tank 2 is pumped back to Tank 1 to again have separated water removed from the emulsion, and then be slowly fed into the hot oil in Tank 3. If Tank 3 has the capacity and is not above 212°F, the contents of Tank 2 may be pumped directly into Tank 3 from which tank the water is withdrawn. Cool or warm (less than 212°F) feeds are always fed slowly into hotter oil to prevent flashing of the water and more volatile organics into vapor which produces spattering.

OIL HEATING

Tanks 3 and 4 are the heating tanks which allow the temperature of the material to be raised slowly. Small amounts of sludge or residue, but very little water, are withdrawn from the bottom of Tanks 3 and 4 with mineral oil feed. The heat lowers the viscosity allowing more rapid settling of the sludges and residues. When emulsions are being fed to the heating tanks, the increased heat finishes breaking the emulsion, and some water is removed from the bottom of Tank 3. However, much of the water, along with more volatile organics, is vaporized in the heating process. Feed between tanks is slow and intermittent, allowing settled material to be withdrawn from the bottom before feeding is resumed. Liquid levels in the heating tanks are allowed to vary, but oil heating is still considered a semicontinuous process. Unless kerosene is a major component of the feed, the temperature of the oil in Tanks 4 and 5 is maintained at about 280°F.

POT FEEDING

The feed rate to the burner is controlled by the valve above the feed pan (Figure 2) to about 20 or 30 gallons per hour. This is about half of the volume of material delivered to the feed preparation system for processing; the other half is removed from the burnable oil in the feed preparation and oil heating steps. An effort is made to maintain the oil in Tank 5 at a reasonably constant level so that a stable feed rate to the feed pan can be maintained. The feed pan prevents rapid changes in pot feed rate when adjustments are made to the feed rate valve. This pan also is a safeguard against over-filling the burning pot, since the oil level in the feed pan is only slightly higher than the normal level in the burning pot. It has been found that some oils must be heated to over 300°F before burning to prevent the more volatile components from flashing when they reach the burning pot and extinguishing the flame. For this reason, oil is preheated in the feed pan to 325°F to 350°F by recycling oil from the pan through the burner and back to the pan.

OIL BURNING

The burning of the oil takes place within a stainless steel pot centered in a refractory brick incinerator. The high pressure draft system is supplied by compressed air (Figure 2). The low pressure draft system is supplied by a fan. Both systems are adjustable both in location and direction of air input to keep the off-gas clean. Experience has shown that some high pressure draft is necessary for clean burning.

Burning normally takes place with little or no smoke except when starting up or shutting down the burner. At these times a few minutes of heavy smoking and about a half hour of light smoking are expected. Heavy smoke, flame coming out of the stack, and entrained ash in the flue gas must all be avoided if contamination of the air is to be avoided. Average uranium levels sampled in the flue gas 5 to 10 feet downwind from the top of the stack are as follows:

Properly controlled burning	0.05 mg/m^3
Light smoke being emitted from stack	0.2 mg/m^3
Entrained ash visible above pot	0.4 mg/m^3
Flame coming out of stack	0.8 mg/m^3
Heavy smoke being emitted from stack	1.9 mg/m^3

The conditions which result in higher uranium levels are all obvious to the operator of the burner, and can be corrected by his adjusting the pot feed rate or the draft systems.

A smaller stainless steel pot, located in one corner of the burner, is used to boil off water removed from the preparation tanks or from the sump. Residue from this evaporation is added to the ash which remains in the burning pot after oil is burned. Three to six drums of ash, each weighing 400 to 500 pounds and assaying 15% to 30% uranium are removed from the burner each month. Although the major purpose of the burner is to dispose of waste organic liquids, the recovery of several hundred pounds of uranium per month which can be used as feed material for the FMPC Scrap Recovery Plant is a worthwhile adjunct to this disposal process.

Waste extraction solvent can not be continuously burned in the same manner as the heavier oils. The ash from this feed has more bulk, a uranium content of only 3% to 4%, and tends to form a crust over the liquid surface in the burning pot which extinguishes the flame. The flame of burning kerosene near the top of the burning pot has been found to be more destructive to the pot than the flame from heavier oils. Also, the crusted phosphate ash formed in this manner has been sintered at high heat, and has been found to give poorer uranium yields in subsequent recovery processes.

The most successful method to date for burning extraction solvent has been to use the pot as a boiler, adjust the draft to keep the burning vapor well above the liquid surface, and remove the pot from the burner before the ash has sintered. This method has not been fully developed with the present oil burner due to limitations of pot heating control and draft control. However, it is quite probable that the problems in burning extraction solvent in production quantities can be solved by further development work involving specialized equipment and capital expense.

CONCLUSIONS

1. Incineration has proven to be the only practical method yet developed to dispose of waste contaminated oil and other organic wastes at the FMPC.

2. The problems inherent in burning extraction solvent can probably be solved by further development work.

3. Nearly all organic wastes need some preparation to serve as burnable feed for a burner. Heating to progressively higher temperatures, along with phase separation, has proved successful in preparing all types of organic wastes for burning.

4. Burning contaminated organic wastes can take place with virtually complete uranium recovery and acceptably low uranium discharge to the air. Careful control of the burner feed rate and draft is necessary for successful operation.

LIST OF ATTENDEES

Acierno, T. G.	Argonne National Laboratory, Argonne, Illinois
Adley, F. E.	GE, Hanford, Richland, Washington
Albrecht, W. L.	Tennessee Valley Authority - Experimental Gas Cooled Reactor, Oak Ridge, Tennessee
Amos, C. L.	Dow Chemical Co., Rocky Flats Division, Denver, Colorado
Anderson, W. L.	Naval Research Laboratory, Washington, D. C.
Anton, G. T.	Space Nuclear Propulsion Office-Nevada, Jackass Flats, Nev.
Arendt, U. W.	Oak Ridge Gaseous Diffusion Plant, UCC, Oak Ridge, Tenn.
Arnett, L. M.	E. I. DuPont de Nemours, Aiken, South Carolina
Ashley, E. C.	Goodyear Atomic Corporation, Piketon, Ohio
Baker, R. E.	U. S. Atomic Energy Commission, Washington, D. C.
Bartkus, M. J.	Oak Ridge Gaseous Diffusion Plant, UCC, Oak Ridge, Tenn.
Beadle, R. W.	U. S. Atomic Energy Commission, Washington, D. C.
Becher, A. F.	Oak Ridge Gaseous Diffusion Plant, UCC, Oak Ridge, Tenn.
Belter, W. G.	U. S. Atomic Energy Commission, Washington, D. C.
Bennett, E. R.	University of California, Berkeley, California
Bernard, H.	U. S. Atomic Energy Commission, Washington, D. C.
Bierly, E. W.	U. S. Atomic Energy Commission, Germantown, Maryland
Bloore, E. W.	U. S. Army Nuclear Defense Laboratory, Edgewood Arsenal, Md.
Boardway, J. C.	U. S. Army Chemical Research and Development Laboratory, Edgewood Arsenal, Maryland
Boies, R. B.	National Lead Company of Ohio, Fernald, Ohio
Brandner, K. E.	National Lead Company of Ohio, Groesbeck, Ohio
Breman, D. J.	Union Carbide Corp. - Y-12, Oak Ridge, Tennessee
Breslin, A. J.	U. S. Atomic Energy Commission, New York, New York
Brion, J.	Commissariat A I Energic Afolique, Fontenay-Aux-Roses, France
Burdge, L.	Los Alamos Scientific Laboratory, Los Alamos, New Mexico
Burr, R. H., Jr.	Mallinckrodt Chemical Works, St. Louis, Missouri
Cheever, C. L.	Argonne National Laboratory, Argonne, Illinois
Clark, K. A.	U. S. Atomic Energy Commission, Canoga Park, California
Coerver, R. A.	E. I. DuPont de Nemours, Wilmington, Delaware
Collins, D. A.	United Kingdom - Atomic Energy Authority, Windscale Works, Seascale, Cumberland
Collins, D. C.	U. S. Atomic Energy Commission, Aiken, South Carolina
Costello, D. C., Jr.	U. S. Atomic Energy Commission, Washington 25, D. C.
Croley, J. J., Jr.	E. I. DuPont de Nemours, Aiken, South Carolina
Culkowski, W. M.	U. S. Weather Bureau, Oak Ridge, Tennessee
Culver, H. N.	Tennessee Valley Authority - Experimental Gas Cooled Reactor, Oak Ridge, Tennessee
Daniels, R. S.	Nuclear Utility Services, Inc., Washington 36, D. C.
Delicate, W. S.	Babcock and Wilcox Company, Lynchburg, Virginia
Dennis, R.	Harvard School of Public Health, Boston, Massachusetts
Doe, W. B.	Argonne National Laboratory, Argonne, Illinois
Dorman, R. G.	United Kingdom - Chemical Defense Experimental Establishment, Porton Down, Wilts., Wiltshire, England
Dreher, F. A.	Tennessee Valley Authority - Experimental Gas Cooled Reactor, Oak Ridge, Tennessee

Ettinger, H. J.	Los Alamos Scientific Laboratory, Los Alamos, New Mexico
Fain, D. E.	Oak Ridge Gaseous Diffusion Plant, UCC, Oak Ridge, Tenn.
Farabee, R. L.	University of Alabama, University, Alabama
First, M.	Harvard University, Boston, Massachusetts
Fisher, R. W.	Ames Laboratory, Ames, Iowa
Fuquay, J. J.	General Electric Co., Hanford, Richland, Washington
Gemmell, L.	Brookhaven National Laboratory, Upton, New York
Gifford, F. A.	U. S. Weather Bureau, Oak Ridge, Tennessee
Gilbert, E.	U. S. Atomic Energy Commission, Germantown, Maryland
Gilbert, H.	U. S. Atomic Energy Commission, Washington 25, D. C.
Gilbert, W. D.	General Electric Company, San Jose, California
Glauberman, H.	U. S. Atomic Energy Commission, New York, New York
Green, J. W.	General Electric Company, Richland, Washington
Grossman, R. E.	U. S. Atomic Energy Commission, Germantown, Maryland
Guilbert, D. E.	Babcock and Wilcox Company, Lynchburg, Virginia
Gussman, R. A.	Geophysics Corporation of America, Bedford, Mass.
Hamester, H. L.	U. S. Atomic Energy Commission, Germantown, Maryland
Hawley, C. A., Jr.	U. S. Atomic Energy Commission, Idaho Falls, Idaho
Heacker, H. V.	U. S. Atomic Energy Commission, Oak Ridge, Tennessee
Hendron, R. H.	Los Alamos Scientific Laboratory, Los Alamos, New Mexico
Hervin, R. L.	U. S. Atomic Energy Commission, Oak Ridge, Tennessee
Hill, R. M.	Atomics International, Canoga Park, California
Hilsmeier, W. F.	U. S. Weather Bureau, Oak Ridge, Tennessee
Hodges, J. W.	Union Carbide Corporation - Y-12, Oak Ridge, Tennessee
Hopkins, H. C., Jr.	General Atomic, San Diego, California
Horn, L.	Underwriters' Laboratories, Inc., Chicago, Illinois
Humphrey, P. A.	R. A. Taft Sanitary Engineering Center, Cincinnati, Ohio
Jamison, D. K.	Johns Hopkins University, Baltimore, Maryland
Johnson, E. C.	Union Carbide Corporation, Oak Ridge, Tennessee
Keisch, B.	Nuclear Science & Engineering Corp., Pittsburgh, Pa.
Keigher, D. J.	U. S. Atomic Energy Commission, Richland, Washington
Kimmel, J. D.	Reynolds Electrical & Engineering Co., Inc., Las Vegas, Nev.
Kimmerly, E. Y.	Union Carbide Corporation, Oak Ridge, Tennessee
King, C. J.	Oak Ridge Gaseous Diffusion Plant, UCC, Oak Ridge, Tenn.
Kochtitzky, O. W.	Tennessee Valley Authority - Experimental Gas Cooled Reactor, Oak Ridge, Tennessee
Kornegay, B. H.	Johns Hopkins University, Baltimore, Maryland
Kusian, R.	Lawrence Radiation Laboratory, Livermore, California
Lachapelle, D. G.	U. S. Army Nuclear Defense Laboratory, Edgewood, Md.
Landow, E. W.	Argonne National Laboratory, Argonne, Illinois
Ledbetter, J. O.	University of Texas, Austin, Texas
Lenhard, J. A.	U. S. Atomic Energy Commission, Oak Ridge, Tennessee
Lewis, L.	U. S. Atomic Energy Commission, Aiken, South Carolina
Libarkin, M. W.	U. S. Atomic Energy Commission, Argonne, Illinois
Lieberman, A.	IIT Research Institute, Chicago, Illinois
Linck, F., Jr.	Dow Chemical Company, Golden, Colorado
List, J. A.	E. I. DuPont de Nemours, Wilmington, Delaware
Little, J. C.	Union Carbide Corporation - Y-12, Oak Ridge, Tennessee
McAdoo, J. D.	Westinghouse Atomic Power Division, Pittsburgh 30, Pa.
McCormack, J. D.	General Electric Company, Richland, Washington
McGeachin, J.	Phillips Petroleum Company, Idaho Falls, Idaho
McFarlane, D. B.	Pratt and Whitney Aircraft, Middletown, Connecticut
Markee, E. H., Jr.	U. S. Weather Bureau, Idaho Falls, Idaho
Mathews, E. R.	U. S. Atomic Energy Commission, Albuquerque, New Mexico
Maxwell, J. E.	General Electric Company, Idaho Falls, Idaho
Megaw, W. J.	United Kingdom - Atomic Energy Authority, Harwell, England
Meyer, H. E.	Mound Laboratory, Miamisburg, Ohio
Mitchell, R. I.	Battelle Memorial Institute, Columbus 1, Ohio
Mitchell, R. N.	Los Alamos Scientific Laboratory, Los Alamos, New Mexico

Modrow, R.	Phillips Petroleum Company, Idaho Falls, Idaho
Morehead, J. F.	Union Carbide Corporation - Y-12, Oak Ridge, Tennessee
Morgan, J. M., Jr.	Johns Hopkins University, Baltimore, Maryland
Murrow, J.	University of California Lawrence Radiation Laboratory, Livermore, California
Neil, J.	Atomic Energy of Canada, Limited, Chalk River, Ontario, Canada
Nitteberg, L. J.	General Electric, Hanford Atomic Products Operation, Richland, Washington
Nussbaumer, D. A.	U. S. Atomic Energy Commission, Washington 25, D. C.
O'Neil, D. P.	Argonne National Laboratory, Argonne, Illinois
Palmer, J. H.	AEC Consultant, Washington, D. C.
Panchuk, F.	Atomic Energy of Canada, Limited, Chalk River, Ontario, Canada
Patton, F. S.	Union Carbide Corporation - Y-12, Oak Ridge, Tennessee
Persons, D. W.	U. S. Atomic Energy Commission, Albuquerque, New Mexico
Peters, A. H., Jr.	E. I. DuPont de Nemours, Aiken, South Carolina
Ray, W. H.	U. S. Atomic Energy Commission, Washington 25, D. C.
Ryan, R. M.	Rensselaer Polytechnic Institute, Troy, New York
Sanders, M.	Union Carbide Corporation - Y-12, Oak Ridge, Tennessee
Schneider, R. W.	Union Carbide Corporation, Oak Ridge, Tennessee
Seifert, H. E.	U. S. Atomic Energy Commission, Las Vegas, Nevada
Senatore, S. J.	Union Carbide Corporation, Oak Ridge, Tennessee
Shapiro, J.	Harvard University School of Public Health, Boston, Mass.
Shapiro, T.	Oak Ridge Gaseous Diffusion Plant, UCC, Oak Ridge, Tenn.
Shaver, B. O.	General Electric Company, Richland, Washington
Shoup, C. S.	U. S. Atomic Energy Commission, Oak Ridge, Tennessee
Shull, R. D.	U. S. Atomic Energy Commission, Washington 25, D.C.
Silverman, L.	Harvard University, Boston, Massachusetts
Slade, D. H.	U. S. Weather Bureau, Washington 25, D.C.
Smith, D. A.	U. S. Atomic Energy Commission, Washington 25, D. C.
Smith, R. P., Jr.	Union Carbide Corporation - Y-12, Oak Ridge Tennessee
Smith, S. E.	United Kingdom -Atomic Energy Authority, Reading, England
St. John, R. B.	U. S. Atomic Energy Commission, Richland, Washington
Steed, J. R.	Union Carbide Corporation, Oak Ridge, Tennessee
Stone, G. F.	Tennessee Valley Authority - Experimental Gas Cooled Reactor, Oak Ridge, Tennessee
Stuart, R. N.	General Electric Nuclear Materials & Propulsion Operation, Cincinnati, Ohio
Szawlewicz, S. A.	U. S. Atomic Energy Commission, Germantown, Maryland
Thaxter, M. D.	University of California Lawrence Radiation Laboratory, Berkeley, California
Thomas, J. W.	U. S. Atomic Energy Commission, New York, New York
Thompson, W. V.	General Electric Company, Richland, Washington
Thornton, W. T.	U. S. Atomic Energy Commission, Oak Ridge, Tennessee
Trammell, H. E.	Union Carbide Corporation, Oak Ridge, Tennessee
Voss, M. D.	Ames Laboratory, Ames, Iowa
Walker, K. A.	U. S. Atomic Energy Commission, Argonne, Illinois
Walrave, W.	c/o Ron. Potten, Nordholland, Netherlands
Weintraub, A. A.	U. S. Atomic Energy Commission, New York, New York
Winterich, D. C.	NASA - Plumbrook Station, Sandusky, Ohio
Young, J. A.	Naval Research Laboratory, Washington, D. C.

Oak Ridge National Laboratory

Abee, Harold H.
Ackley, R. D.
Adams, R. E.
Anderson, Truman D.
Arehart, T. A.
Barton, C. J.
Bettis, C. E.
Bolton, Newell E.
Bottenfield, B. F.
Braatz, Richard J.
Browning, W. E.
Brooksbank, R. E.
Bruce, F. R.
Buchanan, Joel R.
Burchsted, C. A.
Burnett, Thomas J.
Casto, William R.
Clark, Walter E.
Cottrell, William B.
Cottrell, Woodrow D.
Cox, Walter C.
Cowser, K. E.
Cristy, George A.
Culler, F. L.
Davis, D. M.
Davis, Marshall E.
Dunlap, W. E.
Eckert, Louis
Ewing, Samuel T.
Forde, Robert H.
Franzen, L. F.
Frederick, E. J.
Fuller, A. B.
Gale, H. F.
Godbee, H. W.
Boeller, H. E.
Guthrie, C. E.
Haack, L. A.
Hahs, Charles A.
Holladay, J. H.
Holmes, John M.
Hornbaker, W.
Howell, Layton U.
Hungerford, Thomas W.
Hurt, Sam S.
Kahn, Judd E.
Kaplan, S. I.
Keilholtz, G. W.
Kelly, Olin A.
Klepper, O. H.
Lambdin, J.
Lampton, Robert E.
McCurdy, H. C.
Mariroui, L. A.
Manneschmidt, J. F.
Martin, Howard L.
Milford, R. P.
Miller, C. H.
Nichols, J. P.
Nicholson, E. L.
Parish, E. C.
Parker, G. W.
Parsly, Lewis F., Jr.
Pickel, Thomas W., Jr.
Piper, Henry B.
Renfro, G. W.
Roberts, B. F.
Royster, George W.
Schaffer, W. F., Jr.
Schmidt, R. A.
Shields, R. P.
Silverman, M. D.
Stockdale, Walter G.
Struxness, E. G.
Tabor, William H.
Walker, R. L.
Watson, C. D.
Watson, Thomas A.
Whitson, T. C.
Winget, R. H.

Holiday Inn
OF AMERICA
WELCOME AEC
8TH AIR CLEANING
CONFERENCE